This document is the property of Xinshengyue Corporation and is delivered on the express condition that it is not to be disclosed, reproduced or used, in whole or in part, for manufacture or sale by anyone other than Xinshengyue Corporation without its prior concert&that no right is granted to disclose or to use any information in this document.

REV.	ECN NO.	DESCRIPTION	DATE	DESIGN
A	ECN NO.	INITIAL RELEASED	2026.10.05	JASON

RoHS Compliant

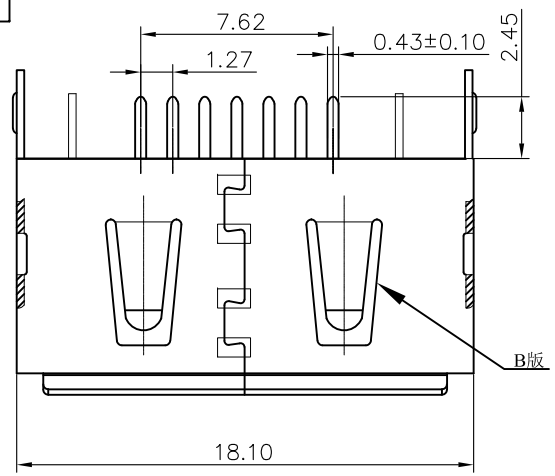

SPECIFICATION:
MATERIAL:
HOUSING: LCP+30% G/F UL 94V-0
COLOR:BLACK
CONTACT: BRASS C2680 H,T=0.25mm
PEG: BRASS C2680R H,T=0.30mm
SHELL: SPCC,T=0.30mm
FINISH:
CONTACT: GOLD FLASH/TIN PLATING ON CONTACT AREA
100u" MIN. TIN-LEAD PLATING ON SOLDER TAILS
40u" MIN. NICKEL UNDERPLATING OVER ALL
PEG:80u" MIN. TIN PLATING ON SOLDER TAILS
40u" MIN. NICKEL UNDERPLATING OVER ALL
SHELL:40u" MIN. NICKEL PLATING OVERALL

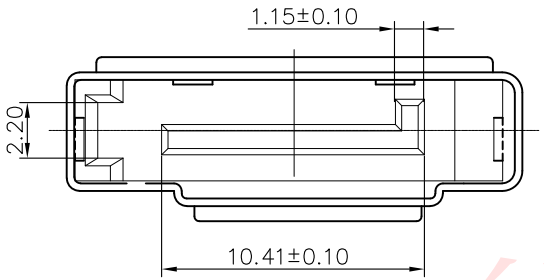

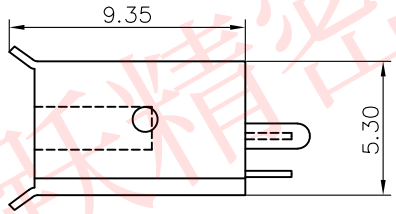

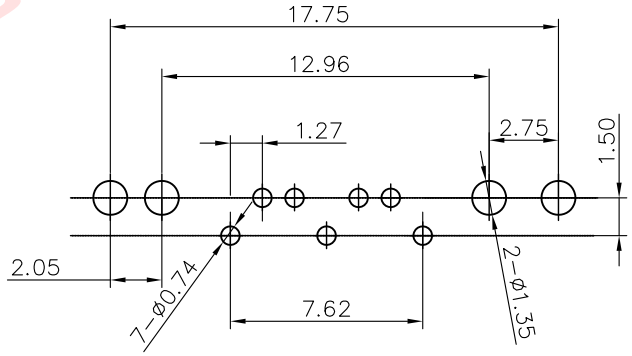

PCB LAYOUT

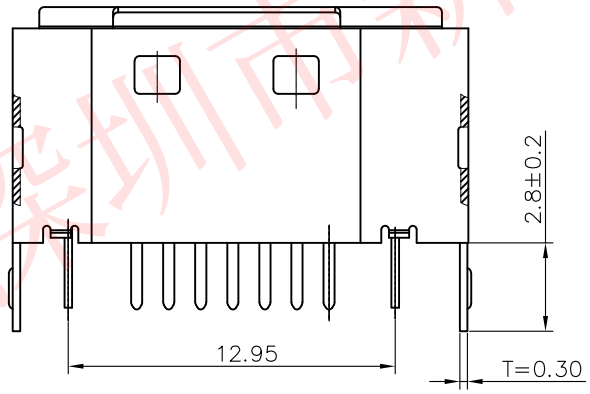

P/N: 106013-121071

- 1:DIP
- PACKAGING 2: TRAY
- CONTACT AREA PLATED 1: Au G/F
- PIN NUMBER:07PIN
- SERIES NUMBER:1,2.3...

TOLERANCE		NAME(INTENDED USE) CUSTOMER DRAWING	XSUA® 深圳市新升跃精密电子有限公司 SHENZHEN XINSHENGYUE PRECISION ELECTRONICS CO., LTD
X.X ±0.30	X.° ±10°	PART NO. SEE P/N	TITLE: SATA 7P公座双柱B型端子 A型鱼叉H=2.45带铁壳直脚
.XX ±0.20	.X° ± 8°		
.XXX ±0.10	.XX° ± 5°		
UNIT	mm	DESIGN: JASON	DRAWG NO. C-106013
MATERIAL	---	CHED: CHECK	SCALE 1:1 / SHEET 1/2 / REV. A
FINISH	---	APPD: ARAY	

深圳市新升跃精密电子有限公司

This document is the property of Xinshengyue Corporation and is delivered on the express condition that it is not to be disclosed, reproduced or used, in whole or in part, for manufacture or sale by anyone other than Xinshengyue Corporation without its prior concert&that no right is granted to disclose or to use any information in this document.

REV.	ECN NO.	DESCRIPTION	DATE	DESIGN
A	ECN NO.	INITIAL RELEASED	2026.10.05	JASON

RoHS Compliant

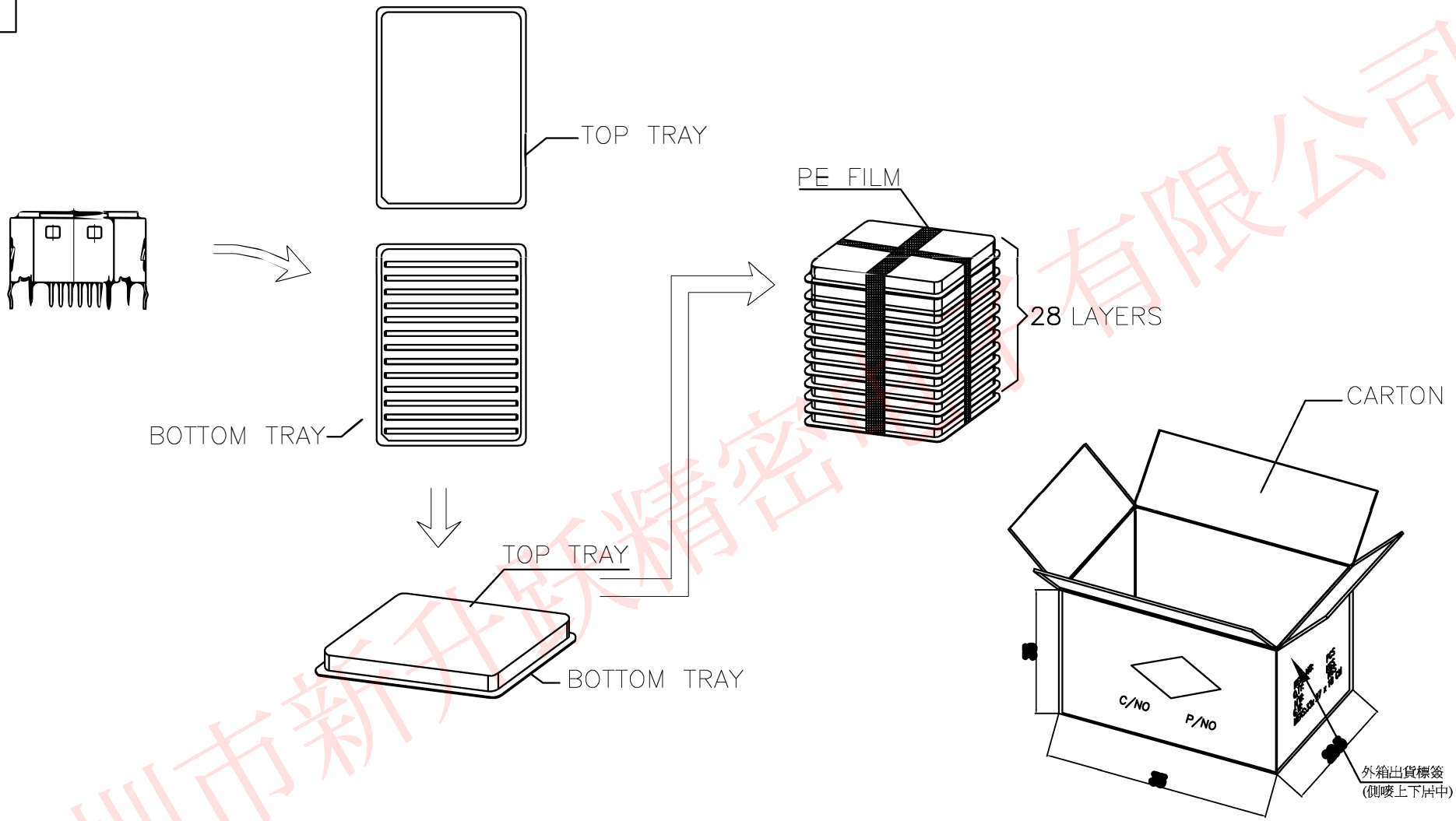

包装说明:

1. 将合格产品放置在吸塑盒内,每1盘装13*13PCS=169PCS产品.
2. 再将吸塑盒叠起,每叠10盘,然后用PE膜缠绕如图所示.
3. 将吸塑盒放入纸箱,共5扎, 每箱总计装8450PCS产品.
4. 纸箱规格330mm*295mm*350mm.

TOLERANCE		NAME(INTENDED USE) CUSTOMER DRAWING	XSUA® 深圳市新升跃精密电子有限公司 SHENZHEN XINSHENGYUE PRECISION ELECTRONICS CO., LTD
X.X ±0.30	X.° ±10°	PART NO. SEE P/N	TITLE: SATA 7P公座双柱B型端子 A型鱼叉H=2.45带铁壳直脚
.XX ±0.20	.X° ± 8°		
.XXX ±0.10	.XX° ± 5°	DESIGN: JASON	DRAWG NO. C-106013
UNIT	mm		
MATERIAL	---	CHED: CHECK	SCALE 1:1 / SHEET 2/2 / REV. A
FINISH	---	APPD: ARAY	

深圳市新升跃精密电子有限公司