This document is the property of Xinshengyue Corporation and is delivered on the express condition that it is not to be disclosed, reproduced or used, in whole or in part, for manufacture or sale by anyone other than Xinshengyue Corporation without its prior concert&that no right is granted to disclose or to use any information in this document.

REV.	ECN NO.	DESCRIPTION	DATE	DESIGN
A	ECN NO.	INITIAL RELEASED	2026.10.05	JASON

RoHS Compliant

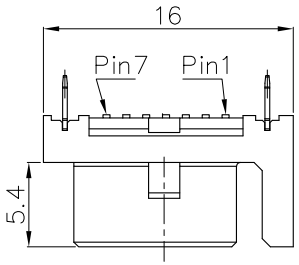

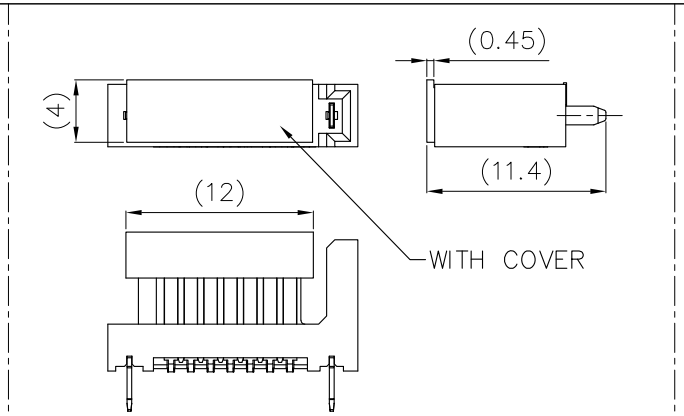

1.MATERIAL SPECIFICATION,
1-1.HOUSING:THERMOPLASTIC,HIGH TEMP,UL 94V-0 ; BLACK;
1-2.COVER:THERMOPLASTIC,HIGH TEMP,UL 94V-0 ; BLACK;
1-3.CONTACT:COPPER ALLOY T=0.2;
1-4.HOOK:COPPER ALLOY T=0.3;
2.PLATING SPECIFICATION,
2-1.CONTACT:
UNDER PLATING:Ni 50u" Min PLATED OVER ALL;
CONTACT AREA: SEE TABLE;
SOLDER TAIL: MATTE TIN 100u" Min PLATED ;
2-2.HOOK: MATTE TIN 100u" Min PLATED OVER Ni 50u" Min.
3.RoHS COMPLIANT

P/N: 106019-211071

- 2:SMT — PACKAGING 1: REEL
- SERIES NUMBER:1,2,3...
- PIN NUMBER:07PIN
- CONTACT AREA PLATED 1: Au G/F

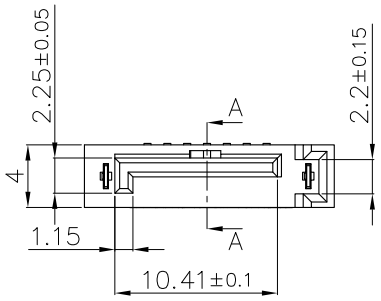

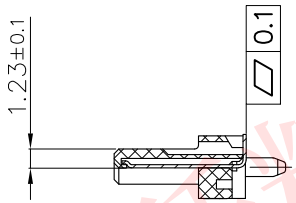

SECTION A-A

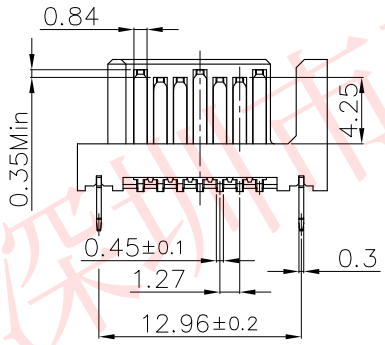

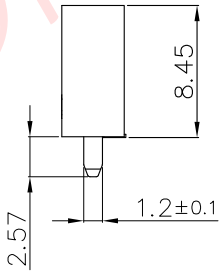

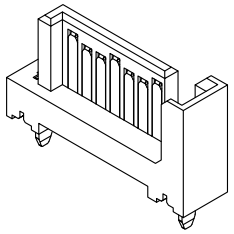

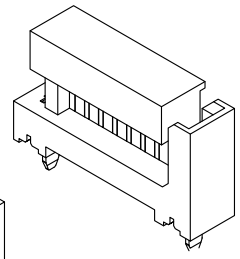

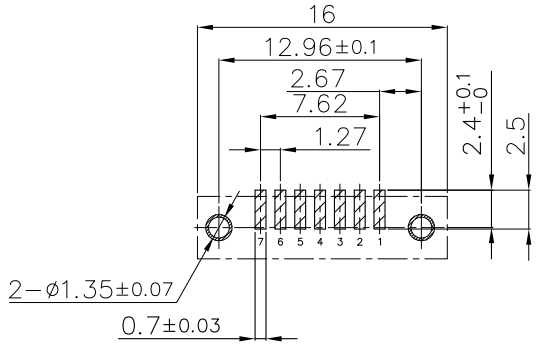

RECOMMENDED P.C.B. LAYOUT(T=1.60)
PCB TOLERANCE ±0.05mm

TOLERANCE		NAME(INTENDED USE) CUSTOMER DRAWING	XSUA® 深圳市新升跃精密电子有限公司 SHENZHEN XINSHENGYUE PRECISION ELECTRONICS CO., LTD
X.X ±0.30	X.° ±10°	PART NO. SEE P/N	TITLE: SATA 7Pin 公座立贴SMT
.XX ±0.20	.X° ± 8°		
.XXX ±0.10	.XX° ± 5°	DESIGN: JASON	DRAWG NO. C-106019
UNIT	mm	CHED: CHECK	SCALE 1:1 / SHEET 1/2 / REV. A
MATERIAL	---	APPD: ARAY	
FINISH	---		

深圳市新升跃精密电子有限公司

This document is the property of Xinshengyue Corporation and is delivered on the express condition that it is not to be disclosed, reproduced or used, in whole or in part, for manufacture or sale by anyone other than Xinshengyue Corporation without its prior concert&that no right is granted to disclose or to use any information in this document.

REV.	ECN NO.	DESCRIPTION	DATE	DESIGN
A	ECN NO.	INITIAL RELEASED	2026.10.05	JASON

RoHS Compliant

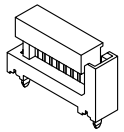

产品图示

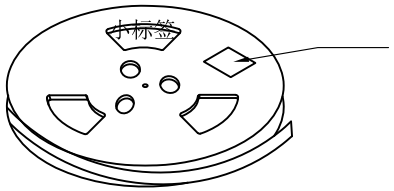

1. 卷盘贴标签

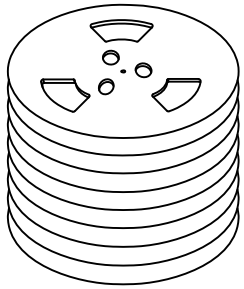

2. 8盘产品叠层

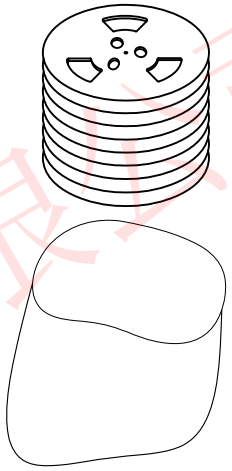

3. 套PE袋

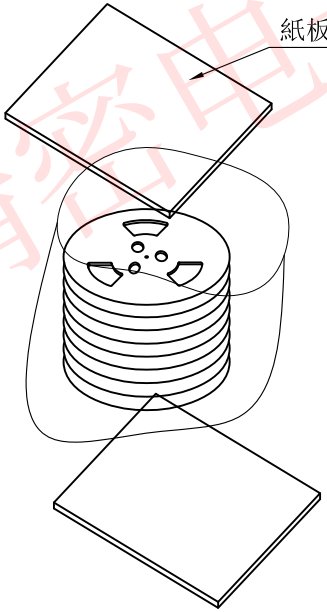

4. 在底部和最上面各放一块纸板

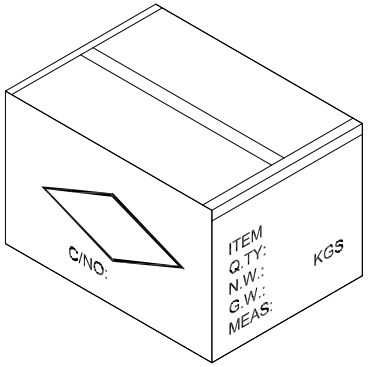

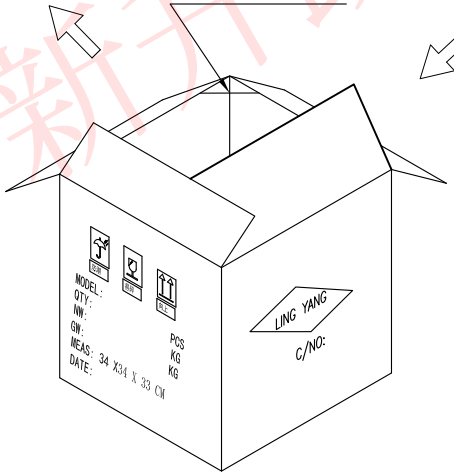

NOTE:

1. QUANTITY/REEL:350 PCS
   数量/卷:350 PCS
   QUANTITY/INNER CARTON:350 X 8 = 2800 PCS
   数量/箱: 350 X 8 = 2800 PCS

TOLERANCE		NAME(INTENDED USE) CUSTOMER DRAWING	XSUA® 深圳市新升跃精密电子有限公司 SHENZHEN XINSHENGYUE PRECISION ELECTRONICS CO., LTD
X.X ±0.30	X.° ±10°	PART NO. SEE P/N	TITLE: SATA 7Pin 公座立贴SMT
.XX ±0.20	.X° ± 8°		
.XXX ±0.10	.XX° ± 5°	DESIGN: JASON	DRAWG NO. C-106019
UNIT	mm		
MATERIAL	---	CHED: CHECK	SCALE 1:1 / SHEET 2/2 / REV. A
FINISH	---	APPD: ARAY	

深圳市新升跃精密电子有限公司