Photocoupler
LTV-M501-YHL series

Small Outline, 5Lead, High Speed Optocouplers

1. DESCRIPTION

The LTV-M501 series consists of a high efficient AlGaAs Light Emitting Diode and a high speed optical detector. This unique design provides excellent AC and DC isolation between the input and output sides of the Optocoupler. Connection for the bias of the photodiode improves the speed of a conventional phototransistor coupler by reducing the base-collector capacitances. The internal shield ensures high common mode transient immunity. A guaranteed common mode transient immunity is up to 15kV/μs (Min.).

1.1 Features

- Surface mountable
- High speed – 1MBd typical
- Compatible with infrared vapor phase reflow and wave soldering process
- Very high common mode transient immunity: 15 kV/μs at V_{CM} = 1500 V guaranteed
- TTL compatible
- Open collector output
- Lead free option
- MSL Level 1
- Worldwide Safety approval :
  UL/ cUL 1577, Cert. No.E113898.
  3750 Vrms/1 min
  VDE DIN EN60747-5-5, Cert. No. 138213
  V_{IORM} = 560 V_{peak}

1.2 Applications

- Ground loop elimination
- Feedback Element in Switching Mode Power Supplier
- High Speed Logic Ground Isolation – TTL/TTL, TTL/LTTL,TTL/CMOS, TTL/LSTTL
- Pulse transformer replacement: save board space and weight
- Analog signal ground isolation: Integrated photon detector provides improved linearity over phototransistor type.

Functional Diagram

Pin No. and Internal connection diagram

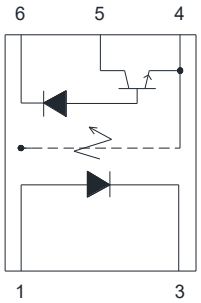

1. Anode
3. Cathode
4. GND
5. Vo (Output)
6. Vcc

A 0.1μF bypass Capacitor must be connected between Pin4 and Pin6.

Truth Table

LED	OUT
ON	L
OFF	H

2. PACKAGE DIMENSIONS

2.1 LTV-M501 series

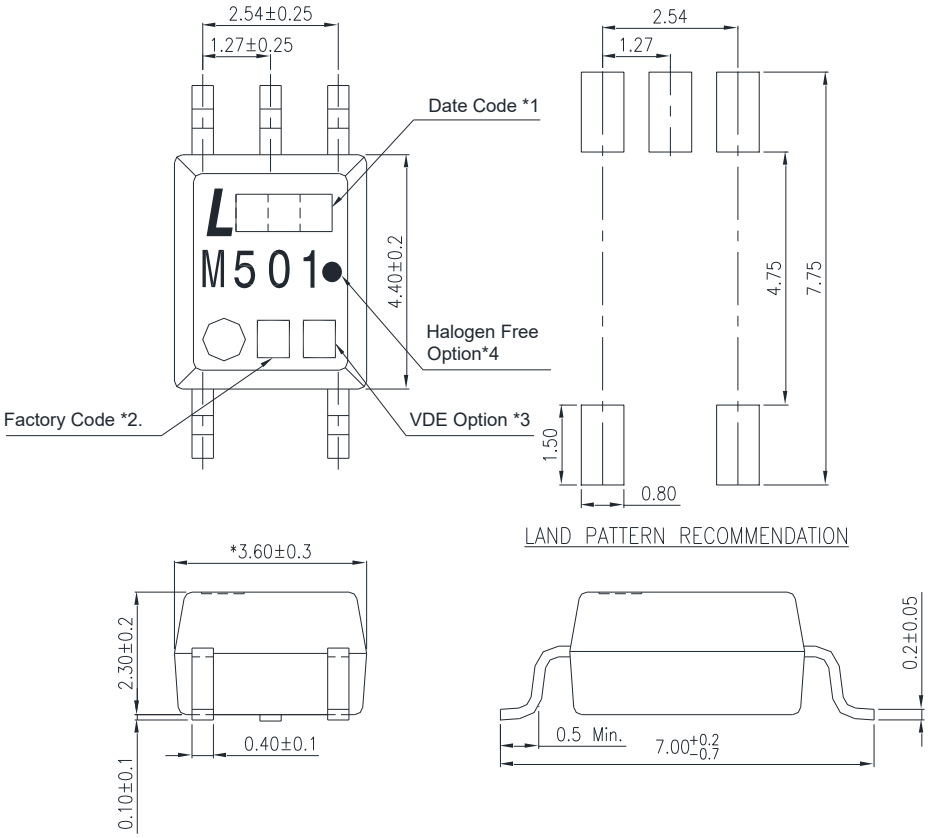

Notes:

1. The first digit is year date code, second and third digit is work week
2. Factory identification mark (W :China-CZ)
3. VDE option
4. Halogen free option

* Dimensions are in Millimeters and (Inches).

* Mold flash on each side is 0.15mm maximum

3. TAPING DIMENSIONS

3.1 LTV-M501

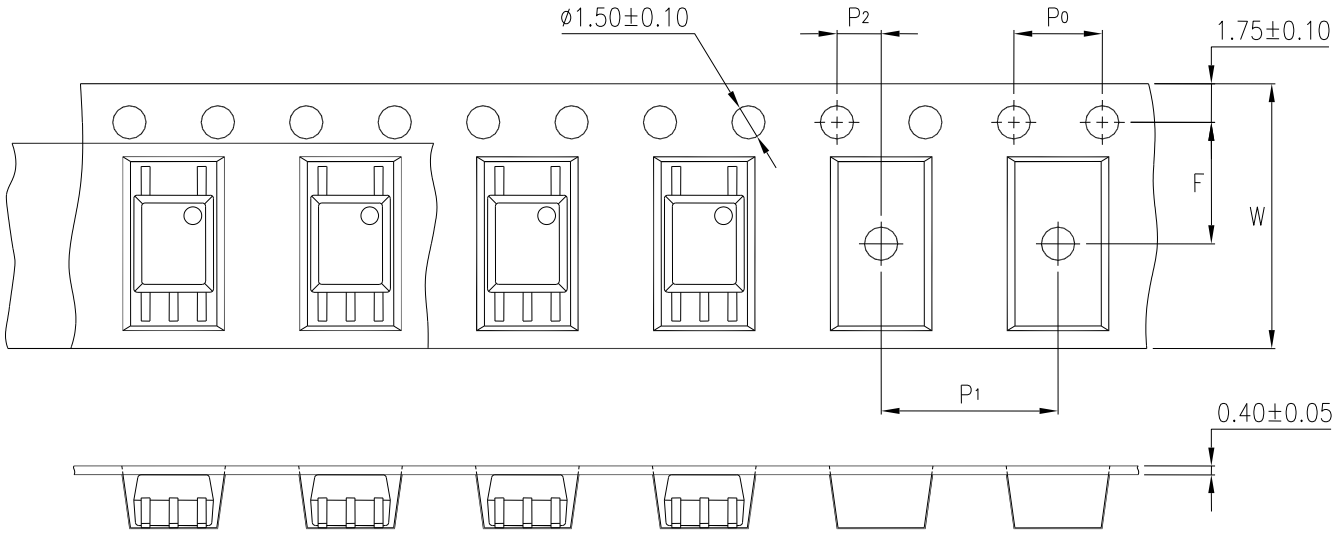

Description	Symbol	Dimension in mm (inch)
Tape wide	W	12 ± 0.3 (.472)
Pitch of sprocket holes	P_0	4 ± 0.1 (.157)
Distance of compartment	F	5.5 ± 0.1 (.217)
	P_2	2 ± 0.1 (.079)
Distance of compartment to compartment	P_1	8 ± 0.1 (.315)

3.3 Quantities Per Reel

Package Type	LTV-M501 series
Quantities (pcs)	3000

4. RATING AND CHARACTERISTICS

4.1 Absolute Maximum Ratings at Ta=25°C *

Parameter	Symbol	Min	Max	Units	Note
Storage Temperature	T_{ST}	-55	125	°C	
Operating Temperature	T_A	-55	100	°C	
Isolation Voltage	V_{ISO}	3750		V_{RMS}	
Supply Voltage	V_{CC}	-0.5	30	V	
Lead Solder Temperature **			260	°C	
Input					
Average Forward Input Current	I_F		25	mA	
Peak Input Current (50% duty cycle, 1 ms pulse width)	$I_{F(PEAK)}$		50	mA	
Peak Transient Input Current (1 µs pulse width, 300 pps)	$I_{F(TRANS)}$		1.0	A	
Reverse Input Voltage	V_R		5	V	
Input Power Dissipation	P_I		45	mW	
Output					
Output Collector Current	$I_{O(AVG)}$		8	mA	
Peak Output Current	$I_{O(PEAK)}$		16	mA	
Output Collector Voltage	V_O	-0.5	20	V	
Output Collector Power Dissipation	P_O		100	mW	

*Ambient temperature = 25°C, unless otherwise specified. Stresses exceeding the absolute maximum ratings can cause permanent damage to the device. Exposure to absolute maximum ratings for long periods of time can adversely affect reliability.

**260°C for 10 seconds. Refer to Lead Free Reflow Profile.

4.2 Electrical Optical Characteristics

Parameter	Test Condition	Symbol	Min	Typ.	Max	Units	Fig.	Note
Input								
Input Forward Voltage	I_F =16mA, T_A=25 °C	V_F	1.2	1.4	1.8	V	3	
Input Reverse Current	V_R = 5V	I_R			10	μA		
Detector								
Current transfer ratio	I_F = 16mA; V_{CC} = 4.5V; T_A = 25 °C; V_O = 0.4V	CTR	20	36	50	%	2,4	2
	I_F = 16mA; V_{CC} = 4.5V; T_A = 25 °C; V_O = 0.5V		15	38				
Logic low output voltage output voltage	I_F = 16mA; V_{CC} = 4.5V; I_o = 3.0mA; T_A = 25 °C	V_{OL}		0.2	0.4	V		
	I_F = 16mA; V_{CC} = 4.5V; I_o = 2.4mA; T_A = 25 °C				0.5			
Logic high output current	I_F = 0mA, V_O = V_{CC} = 5.5V, T_A = 25 °C	I_{OH}		0.002	0.5	μA	7	
	I_F = 0mA, V_O = V_{CC} = 15V T_A = 25 °C			0.005	1			
	T_A = 0 ~ 70°C				50			
Logic low supply current	I_F = 16mA, V_o = open (V_{CC}=15V)	I_{CCL}		185				1
Logic high supply current	I_F = 0mA, V_o = open; T_A = 25 °C (V_{CC} = 15V)	I_{CCH}		0.002	1			1

*Over recommended temperature (T_A = 0°C to 70°C) unless otherwise specified.

*All Typical at T_A=25°C

5. SWITCHING SPECIFICATION

Parameter	Test Condition		Symbol	Min	Typ.	Max	Units	Fig.	Note
Propagation Delay Time to Low Output Level	T_A = 25°C	R_L=1.9KΩ	t_{PHL}		190	800	ns	5,6,9	3, 4
	0 ~ 100°C					800			
Propagation Delay Time to High Output Level	T_A = 25°C		t_{PLH}		150	800		5,6,9	3, 4
	0 ~ 100°C					800			
Logic High Common Mode Transient Immunity	I_F = 0mA; V_{CM} = 1500Vp-p C_L = 15 pF; T_A=25 °C, R_L=1.9KΩ		$\|CM_H\|$	15			kV/μs	10	3, 4
Logic Low Common Mode Transient Immunity	I_F = 16mA; V_{CM} = 1500Vp-p C_L = 15 pF; T_A = 25 °C, R_L = 1.9KΩ		$\|CM_L\|$	15			kV/μs	10	3, 4

*Over recommended temperature (T_A = 0°C to 70°C) V_{CC} = 5 V, I_F = 16mA unless otherwise specified.

*All Typical at T_A =25°C

6. ISOLATION CHARACTERISTIC

Parameter	Symbol	Min.	Typ.	Max.	Unit	Test Condition	Note
Input-Output Insulation Leakage Current	I_{I-O}	—	—	1.0	μA	45% RH, t = 5s, V_{I-O} = 3kV DC, T_A =25°C	5
Withstand Insulation Test Voltage	V_{ISO}	3750	—	—	V_{RMS}	RH ≤ 50%, t = 1min, T_A = 25°C	5, 6
Input-Output Resistance	R_{I-O}	—	10^{12}	—	Ω	V_{I-O} = 500V DC	5

Typical values apply to T_A = 25°C

Note

1. Use of a 0.1 μf bypass capacitor connected between pins 4 and 6 is recommended.
2. Current Transfer Ratio is defined as the ratio of output collector current Io, to the forward LED input current I_F, times 100.
3. The 1.9KΩ load represents 1TTL unit load of 1.6mA and the 5.6KΩ pull-up resistor.
4. The 4.1KΩ load represents 1LSTTL unit load of 0.36mA and the 6.1KΩ pull-up resistor.
5. Device considered a two-terminal device: Pins 1 and 3 shorted together and Pins 4, 5 and 6 shorted together.
6. In accordance with UL1577, each optocoupler is proof tested by applying an insulation test voltage 4500Vrms for one second. (leakage current less than 10 μA). This test is performed before the 100% production test for partial discharge.

7. TYPICAL PERFORMANCE CURVES

Figure 1: DC and Pulsed Transfer Characteristics.

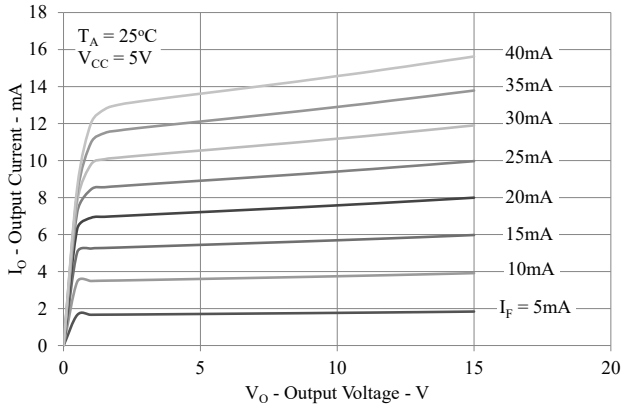

Figure 2: Current Transfer Ratio vs. Input Current.

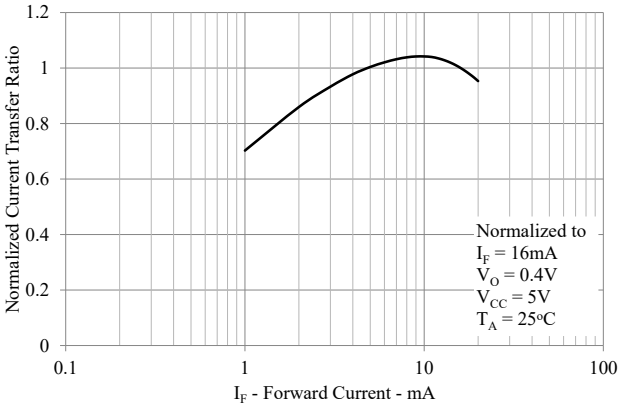

Figure 3: Input Current vs. Forward Voltage.

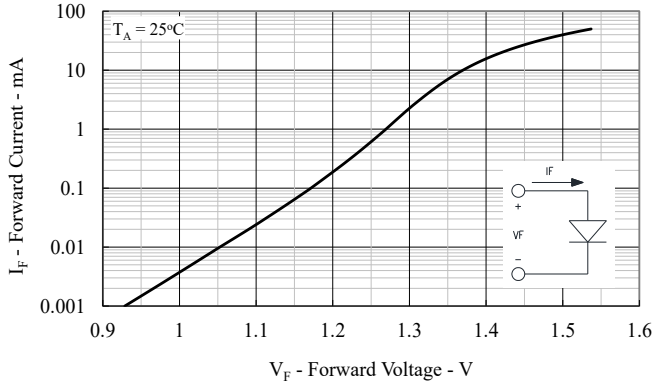

Figure 4: Current Transfer Ratio vs. Temperature.

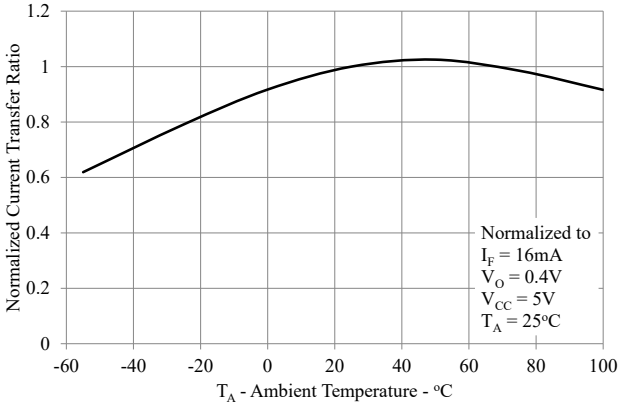

Figure 5: Propagation Delay vs. Load Resistance.

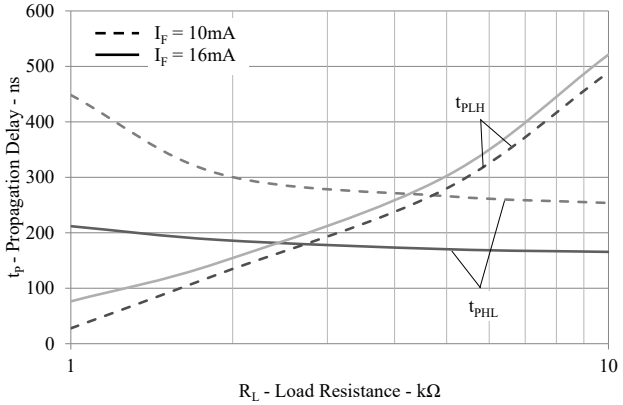

Figure 6: Propagation Delay Time vs.Temperature.

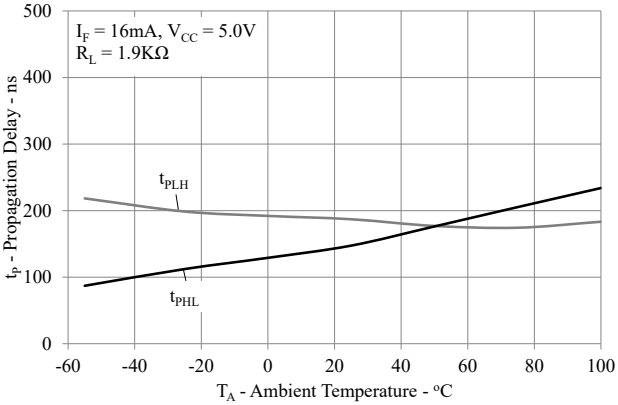

Figure 7: Logic High Output Current vs. Temperature.

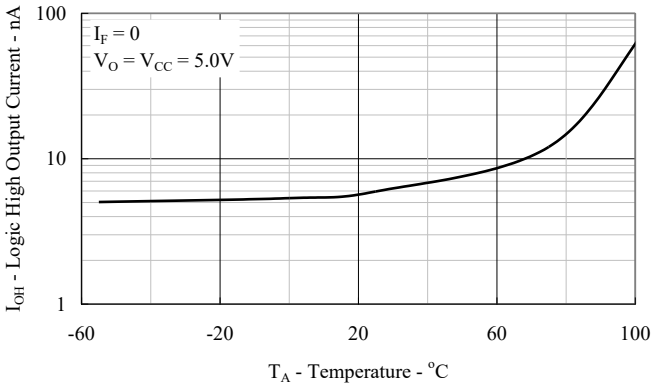

Figure 8: Frequency Response.

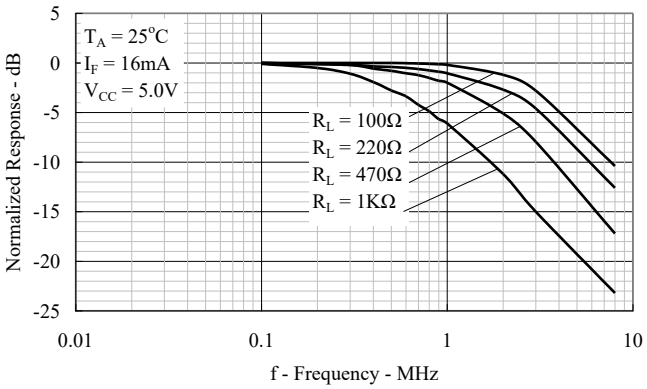

Figure 9: Switching Test Circuit.

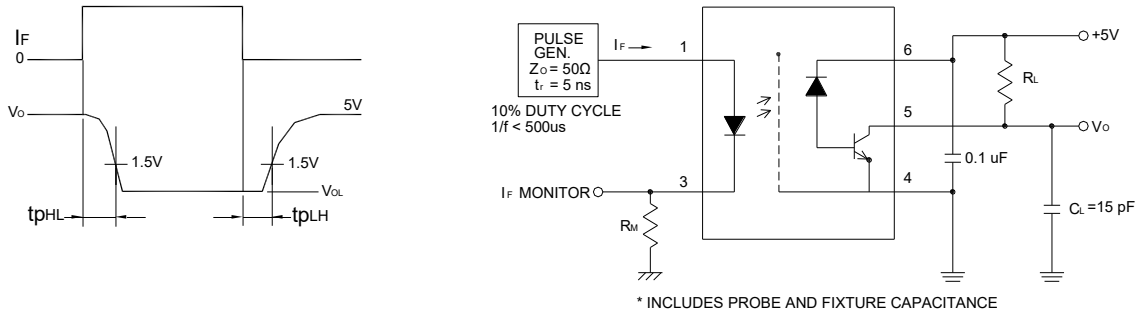

Figure 10: Test Circuit for Transient Immunity and Typical Waveforms.

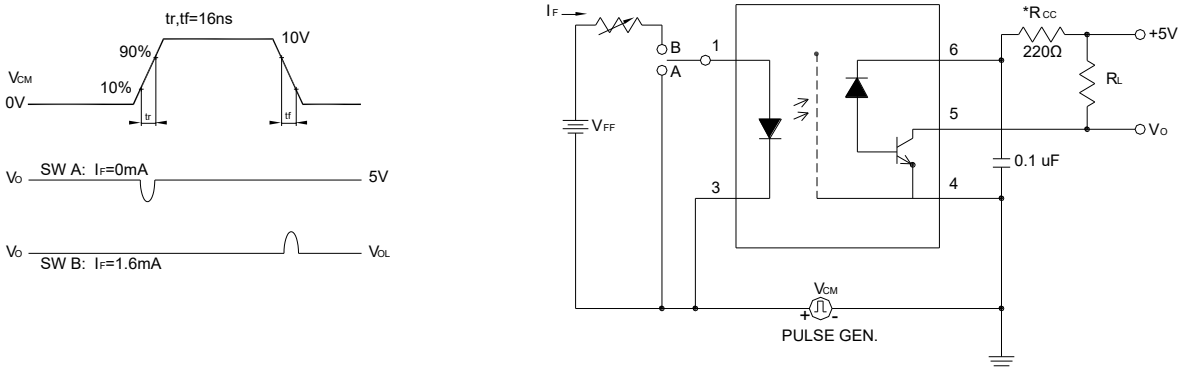

8. TEMPERATURE PROFILE OF SOLDERING

8.1 IR Reflow soldering (JEDEC-STD-020C compliant)

One time soldering reflow is recommended within the condition of temperature and time profile shown below. Do not solder more than three times.

Profile item	Conditions
Preheat	
- Temperature Min (T_{Smin})	150˚C
- Temperature Max (T_{Smax})	200˚C
- Time (min to max) (ts)	90±30 sec
Soldering zone	
- Temperature (T_L)	217˚C
- Time (t_L)	60 ~ 100sec
Peak Temperature (T_P)	260˚C
Ramp-up rate	3˚C / sec max.
Ramp-down rate	3~6˚C / sec

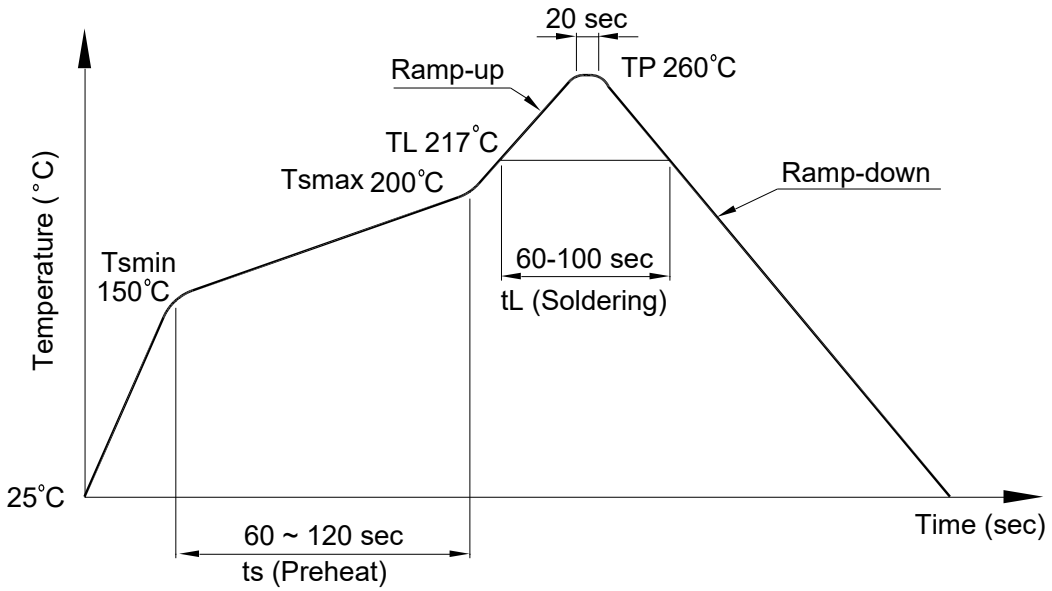

8.2 Wave soldering (JEDEC22A111 compliant)

One time soldering is recommended within the condition of temperature.

Temperature: 260+0/-5˚C

Time: 10 sec.

Preheat temperature:25 to 140˚C

Preheat time: 30 to 80 sec.

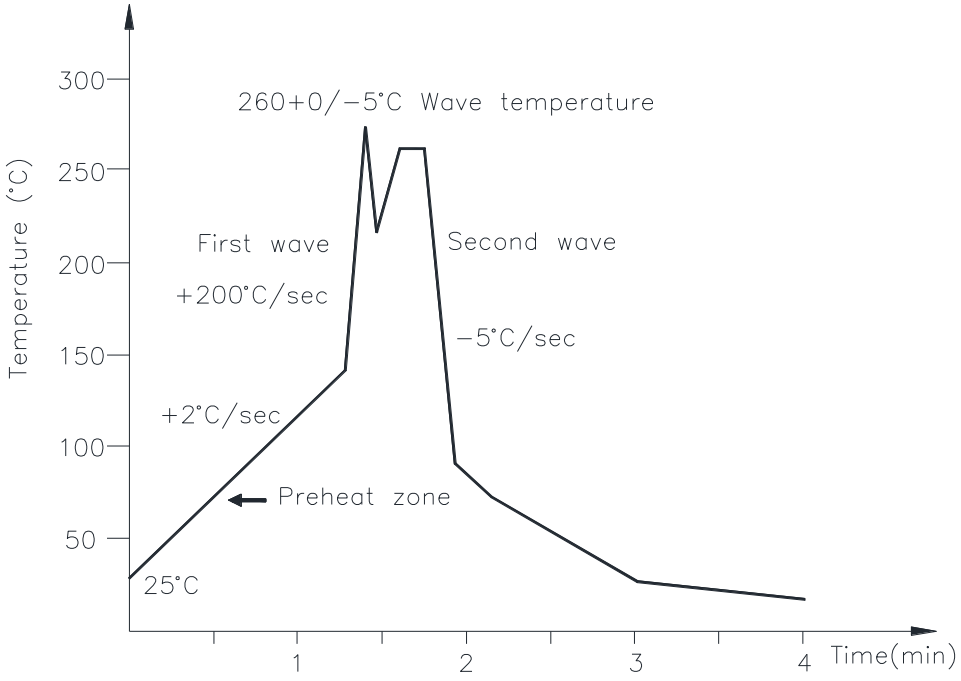

8.3 Hand soldering by soldering iron

Allow single lead soldering in every single process. One time soldering is recommended.

Temperature: 380+0/-5˚C

Time: 3 sec max.

9. NAMING RULE

Part Number Options
LTV-M501-YHL
LTV-M501-G-YHL
LTVM501-V-G-YHL

Definition of Suffix	Remark
“M501”	LiteOn model name
“no suffix”	Pin 1 location at upper right of the tape
“V”	VDE approved option
“G”	Halogen free option
“YHL”	Customized suffix

10. NOTES

LiteOn is continually improving the quality, reliability, function or design and LiteOn reserves the right to make changes without further notices.

The products shown in this publication are designed for the general use in electronic applications such as office automation equipment, communications devices, audio/visual equipment, electrical application and instrumentation.

For equipment/devices where high reliability or safety is required, such as space applications, nuclear power control equipment, medical equipment, etc, please contact our sales representatives.

When requiring a device for any ”specific” application, please contact our sales in advice.

If there are any questions about the contents of this publication, please contact us at your convenience.

The contents described herein are subject to change without prior notice.

Immerge unit’s body in solder paste is not recommended.