Bandpass Filter

JY-BFCN-5151+

Features
- small size
- temperature stable
- LTCC construction

Applications
- Harmonic rejection
- Transmitters / Receivers

Functional Schematic

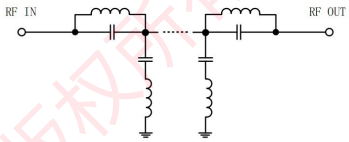



Generic photo used for illustration purposes only

50 Ω 4120 to 6440 MHz

Maximum Ratings	
Operating Temperature	-55°C to 100°C
Storage Temperature	-55°C to 100°C
RF Power Input*	1W .at 25°C

*Passband rating, derate linearly to 0.5W at 100°C ambient
Permanent damage may occur if any of these limits are exceeded.

Pin Connections	
Input	1
Output	3
Ground	2

Electrical Specifications[1] at 25°C

Parameter		Frequency(MHz)	Min.	Typ.	Max.	Unit
Pass Band	Center Frequency Insertion Loss Return Loss	- 4120-6440 4120-6440	 - -	5151 1.2 14	 3.0 -	MHz dB dB
Stop Band,Lower	Insertion Loss	DC-3000	20	24	-	dB
Stop Band,Upper	Insertion Loss	8820-10450 10450-14250	20 15	32 25	- -	dB dB

1. This filter is not intended for use as a DC Blocking circuit element. In Application where DC voltage is present at either input or output ports, blocking capacitors are required at the corresponding RF port.

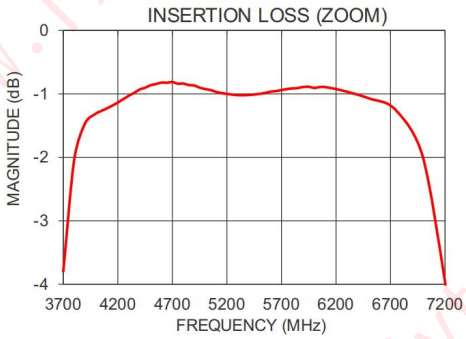

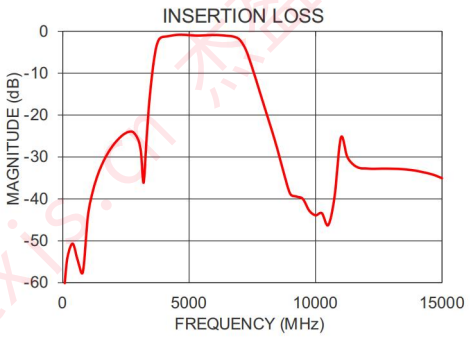

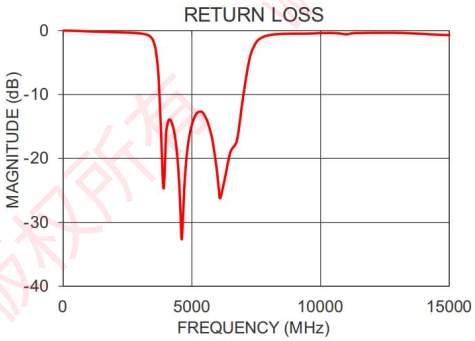

Suggested PCB Layout

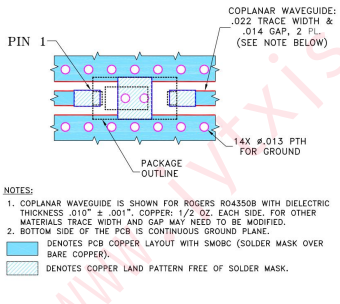

Outline Drawing

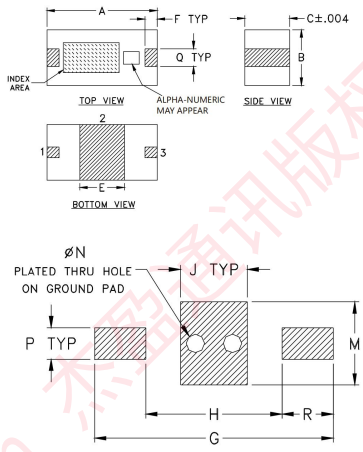

Suggested Layout
Tolerance to be within ±0.05

Outline Dimensions：Unit (mm)					
A	3.20	B	1.60	C	1.30
E	1.30	F	0.36	G	4.65
H	2.64	J	1.30	M	1.60
N	0.36	P	0.61	Q	0.51
R	0.99				

JY-BFCN-5151+