BORN SEMICONDUCTOR

BNPESD0201VxxR Series

ESD Protection Diode

Features

- The best ESD protection for high speed ,high frequency and low voltage applications
- RoHS compliant and halogen free
- Ultra low capacitance, 0.05 pF (typ.)
- Low clamping voltage according to IEC61000-4-2
- Fast response time
- IEC61000-4-2 (ESD):Contact ±8kV
- IEC61000-4-2 (ESD):Air ±15kV
- Surface mount

Package

DFN0603

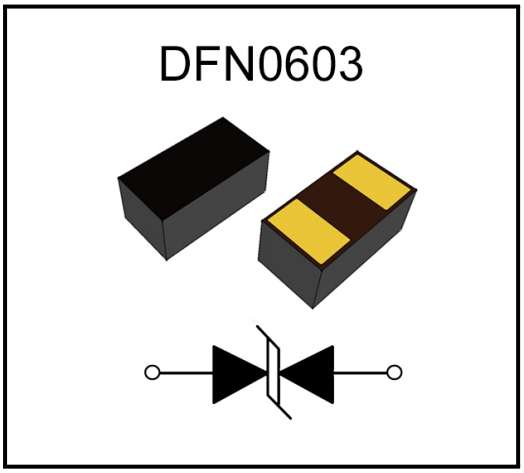

Applications

- USB2.0 and USB3.0
- Ultra-high-speed data line
- Sensitive interfaces lines
- High Definition Multi-media Interface(HDMI)
- Antenna applications
- 10/100/1000Mbit/s Ethernet

Mechanical Data

- Molding compound flammability rating: UL94V-0
- Packaging: Tape and Reel
- RoHS/WEEE Compliant

Ordering information

Order code	Package	Base qty	Delivery mode
BNPESD0201VxxR Series	DFN0603	15k	Tape and reel

Absolute Maximum Rating

Rating	Symber	Value	Units
ESD per IEC 61000-4-2 (Contact) ESD per IEC 61000-4-2 (Air)	V_{ESD}	±8 ±15	KV
Lead Soldering Temperature	T_L	260(10seconds)	°C
Operating Temperature	T_O	-55 to + 125	°C
Storage Temperature	T_{stg}	-55 to + 125	°C

BORN SEMICONDUCTOR , INC. ALL RIGHT RESERVED

Specifications are subject to change without notice.
Please refer to http://*www.born-tw.com* for current information.

BNPESD0201VxxR Series

ESD Protection Diode

Electrical Characteristics

Part NO.	Working Voltage	Typical ESD Trigger Voltage	Typical ESD Clamping Voltage at 60ns	Leakage Current (at Initial State)	Cap. Value @10MHz
Symbol	$V_{DC(max.)}$	$V_{trigger(typ.)}$	$V_{C(typ.)}$	I_{LDC}	**C(Typ.)**
Unit	**V**	**V**	**V**	**μA**	**pF**
BNPESD0201V05R	5	300	35	<0.1	0.05
BNPESD0201V09R	9	300	35	<0.1	0.05
BNPESD0201V12R	12	300	35	<0.1	0.05
BNPESD0201V14R	14	300	35	<0.1	0.05
BNPESD0201V15R	15	300	35	<0.1	0.05
BNPESD0201V18R	18	300	35	<0.1	0.05
BNPESD0201V24R	24	300	35	<0.1	0.05
BNPESD0201V36R	36	300	35	<0.1	0.05

ESD Clamping Test

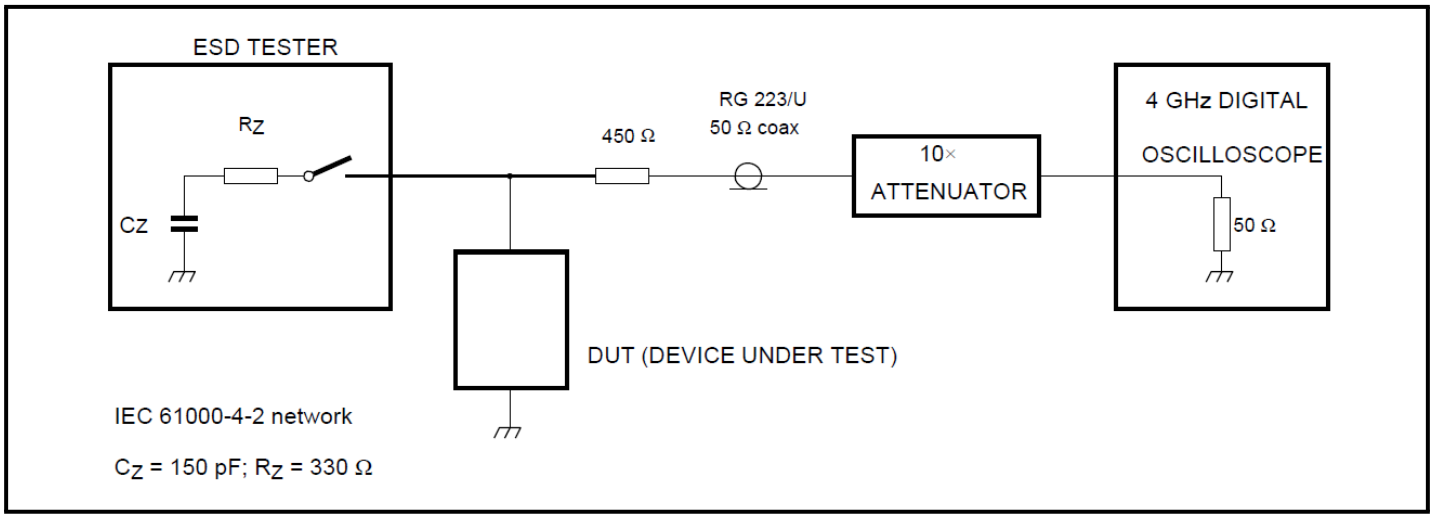

BORN SEMICONDUCTOR , INC. ALL RIGHT RESERVED

Specifications are subject to change without notice.
Please refer to http://*www.born-tw.com* for current information.

BNPESD0201VxxR Series

ESD Protection Diode

Figure 1:ESD pulse wavefrom according to IEC 61000-4-2

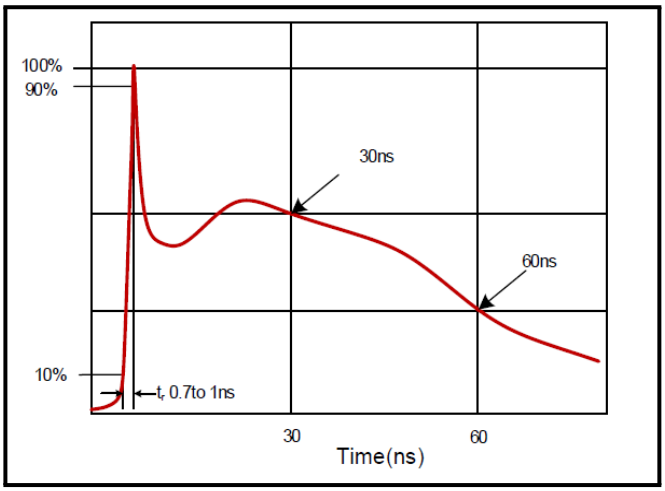

Figure 2:8kV Contact ESD pulse clampingper IEC61000-4-2

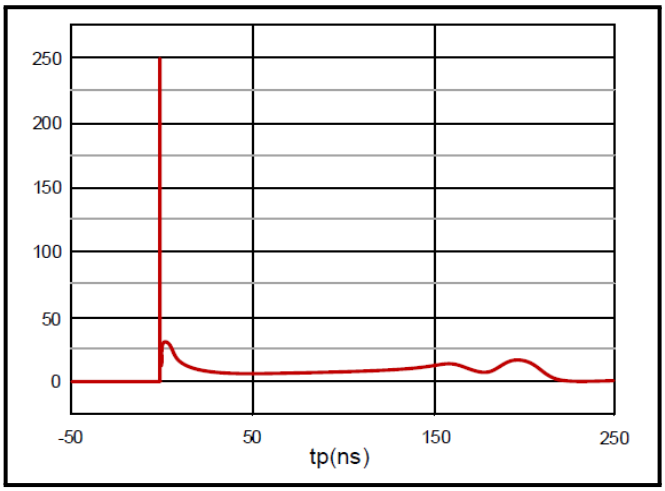

Figure 3:Solder Reflow Recommendations

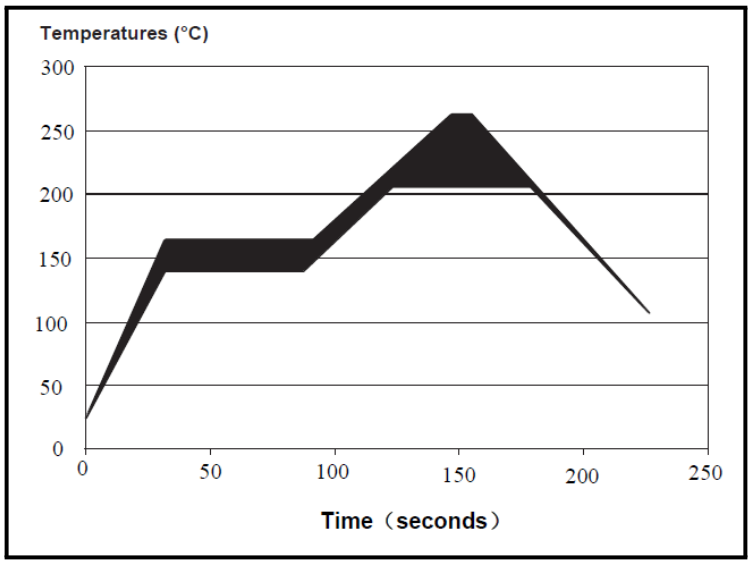

BORN SEMICONDUCTOR , INC. ALL RIGHT RESERVED

Specifications are subject to change without notice.
Please refer to http://*www.born-tw.com* for current information.

BNPESD0201VxxR Series

ESD Protection Diode

Outline Drawing - DFN0603

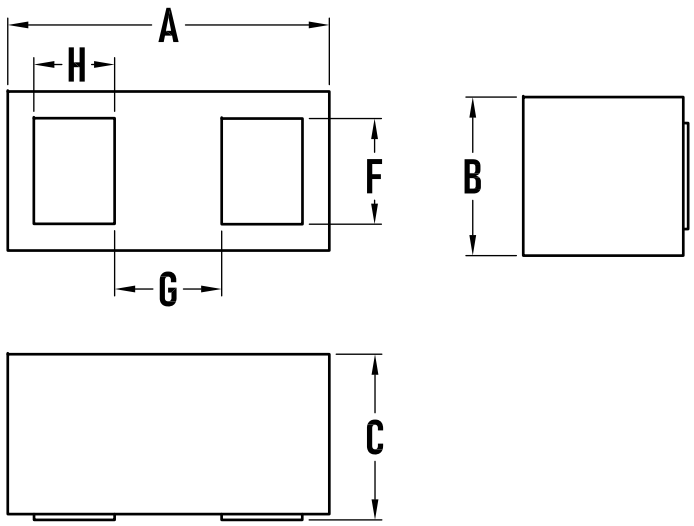

SYMBOL	MILLIMETERS		
	MIN.	Typ.	MAX.
A	0.55	0.60	0.65
B	0.25	0.30	0.35
C	0.25	0.30	0.35
H	0.18	0.20	0.22
F	0.255	0.275	0.295
G	0.16	0.18	0.20

BORN SEMICONDUCTOR , INC. ALL RIGHT RESERVED

Specifications are subject to change without notice.
Please refer to http://*www.born-tw.com* for current information.