SOP4, DC Input, Zero-Cross Photo TRIAC Optocoupler

Description

The TWSM303X(ZF) and TWSM304X(ZF) and TWSM306X(ZF) series combine an AlGaAs infrared emitting diode as the emitter which is optically coupled to a monolithic silicon zero-cross photo triac in a plastic SOP4 package.

With the robust coplanar double mold structure, TWSM303X(ZF) and TWSM304X(ZF) and TWSM306X(ZF) series provide the most stable isolation feature.

Features

- High isolation 3750 VRMS
- DC input with zero-cross photo triac output
- Operating temperature range - 40 °C to 100 °C
- REACH compliance
- Halogen free
- MSL class 1
- Regulatory Approvals
  - UL - UL1577
  - VDE - EN60747-5-5(VDE0884-5)
  - CQC - GB4943.1, GB8898

Applications

- Solenoid/valve controls
- Lighting controls
- Motor controls
- Temperature controls
- Static AC power switches
- Solid state relays
- Interfacing microprocessors to 115 to 240VAC peripherals

SCHEMATIC

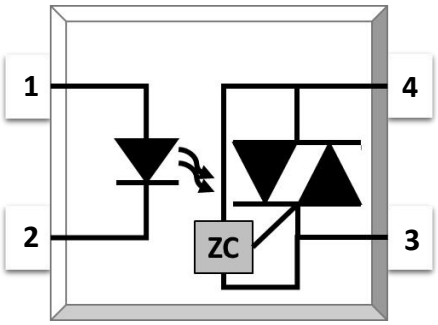

PIN DEFINITION

1. Anode
2. Cathode
3. Terminal
4. Terminal

PACKAGE OUTLINE

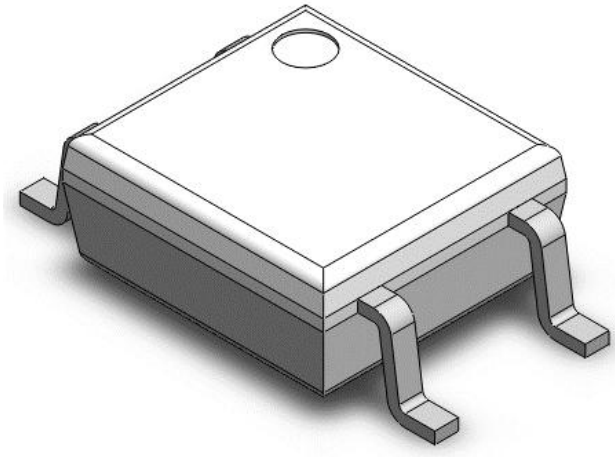

ABSOLUTE MAXIMUM RATINGS					
PARAMETER		SYMBOL	VALUE	UNIT	NOTE
INPUT					
Forward Current		I_F	60	mA	
Reverse Voltage		V_R	6	V	
Junction Temperature		Tj	125	°C	
Input Power Dissipation		P_I	100	mW	
OUTPUT					
Off-state Output Terminal Voltage	TWSM303X(ZF)	V_{DRM}	250	V	
	TWSM304X(ZF)		400		
	TWSM306X(ZF)		600		
Peak Repetitive Surge Current PW=100μs, 120pps		I_{TSM}	1	A	
On-State RMS Current		$I_{T(RMS)}$	100	mA	
Junction Temperature		Tj	125	°C	
Output Power Dissipation		P_O	300	mW	
COMMON					
Total Power Dissipation		Ptot	400	mW	
Isolation Voltage		Viso	3750	Vrms	1
Operating Temperature		Topr	-40~100	°C	
Storage Temperature		Tstg	-55~125	°C	
Soldering Temperature		Tsol	260	°C	2

Note 1. 100μs pulse, 100Hz frequency

Note 2. AC For 1 Minute, R.H. = 40 ~ 60%

ELECTRICAL OPTICAL CHARACTERISTICS at Ta=25°C								
PARAMETER		SYMBOL	MIN.	TYP.	MAX.	UNIT	TEST CONDITION	NOTE
INPUT								
Forward Voltage		V_F	-	1.24	1.4	V	I_F=10mA	
Reverse Current		I_R	-	-	10	μA	V_R=6V	
Input Capacitance		Cin	-	8.5	250	pF	V=0, f=1kHz	
OUTPUT								
Peak Off-state Current, Either Direction		I_{DRM}	-	-	500	nA	V_{DRM}=Rated V_{DRM} I_F=0	
Peak On-state Voltage, Either Direction		V_{TM}	-	1.80	2.5	V	I_{TM}=100mA	
Critical Rate of Rise of Off-state Voltage		dV/dt	1000	-	-	V/μs	V_{PEAK} =400V, I_F =0	3
TRANSFER CHARACTERISTICS								
LED Trigger Current	TWSM3031(ZF) TWSM3041(ZF) TWSM3061(ZF)	I_{FT}	-	-	15	mA	Terminal Voltage = 3V I_{TM}=100mA	
	TWSM3032(ZF) TWSM3042(ZF) TWSM3062(ZF)		-	-	10			
	TWSM3033(ZF) TWSM3043(ZF) TWSM3063(ZF)		-	-	5			
Holding Current		I_H	-	250	-	μA		
Isolation Resistance		Riso	10^12	10^14	-	Ω	DC500V, 40 ~ 60% R.H.	
Floating Capacitance		C_{IO}	-	0.4	1	pF	V=0, f=1MHz	
ZERO-CROSSING CHARACTERISTICS								
Inhibit Voltage		V_{INH}	-	-	20	V	I_F=Rated I_{FT}	
Leakage in Inhibited State		I_{DRM2}	-	-	500	μA	I_F=Rated I_{FT} V_{DRM}=Rated V_{DRM}	

Note3. Test voltage must be applied within dV/dt rating.

CHARACTERISTIC CURVES

Fig.1 Forward Current vs. Ambient Temperature

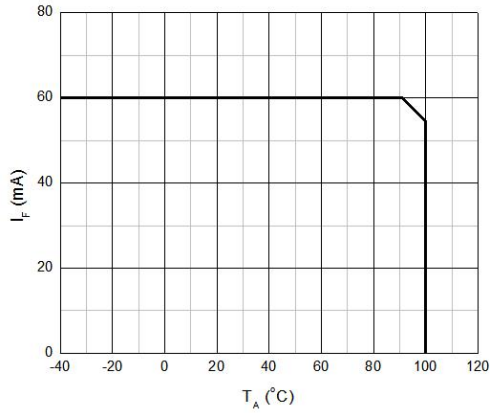

Fig.2 On-state Terminal Current vs. Ambient Temperature

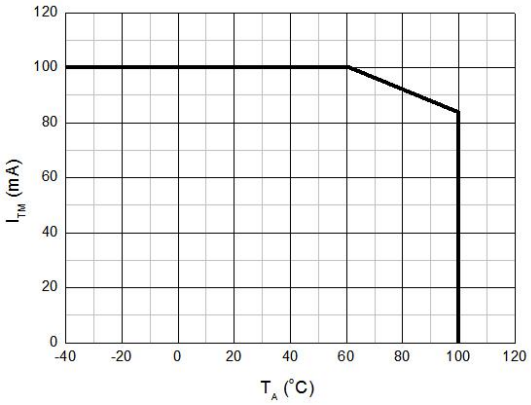

Fig.3 Forward Current vs. Forward Voltage

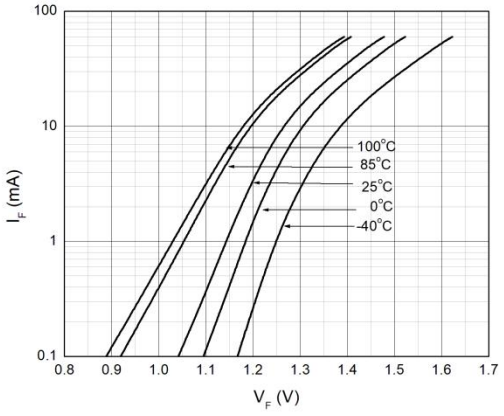

Fig.4 Off-state Terminal Current vs. Ambient Temperature

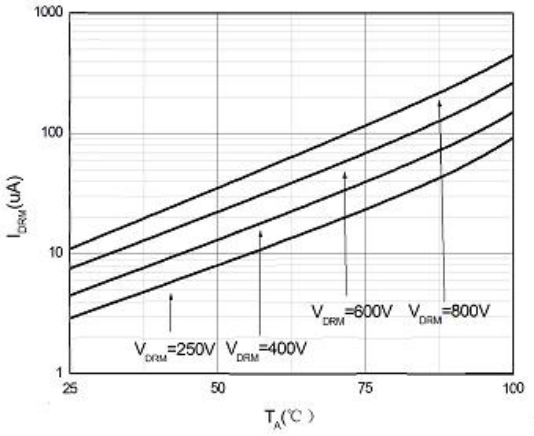

Fig.5 Normalized Off-state Terminal Voltage vs. Ambient Temperature

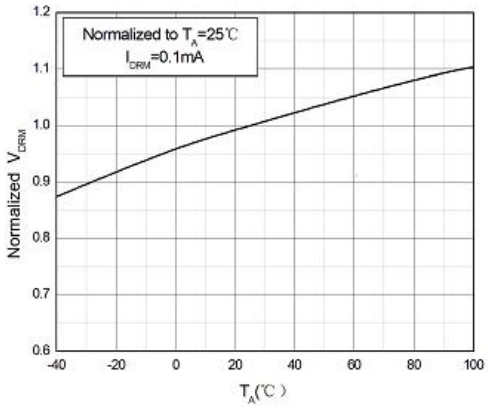

Fig.6 Normalized Trigger Current vs. LED Trigger Pulse Width

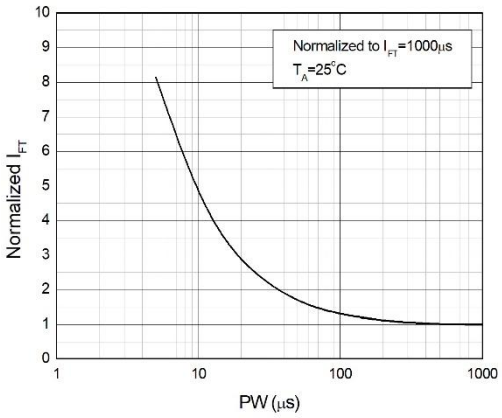

CHARACTERISTIC CURVES

Fig.7 Normalized Trigger Current vs. Ambient Temperature

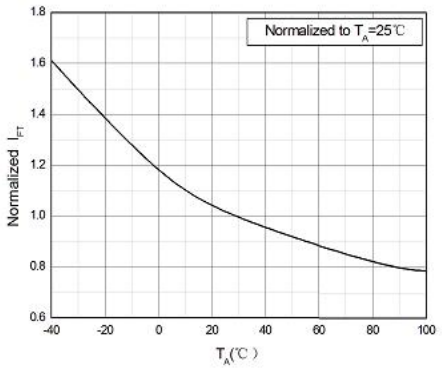

Fig.8 On-state Terminal Voltage vs. Ambient Temperature

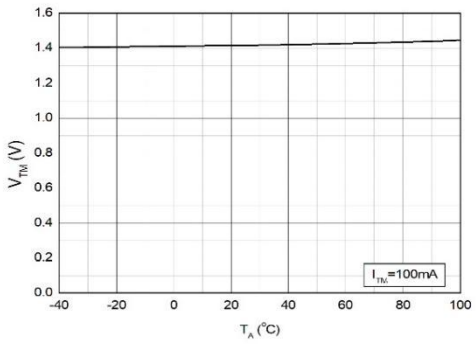

Fig.9 On-state Terminal Voltage vs. On-state Terminal Current

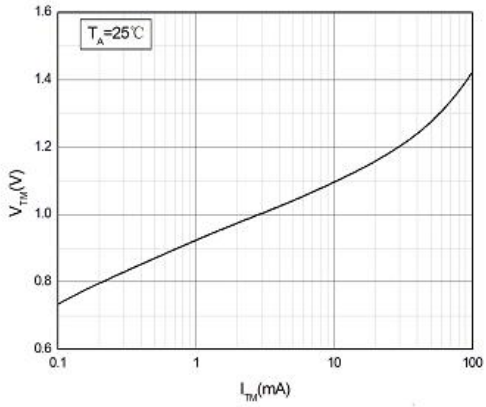

Fig.10 Holding Current vs. Ambient Temperature

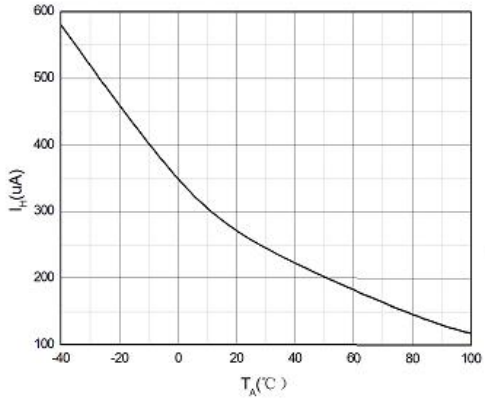

Fig.11 Normalized Inhibit Voltage vs. Ambient Temperature

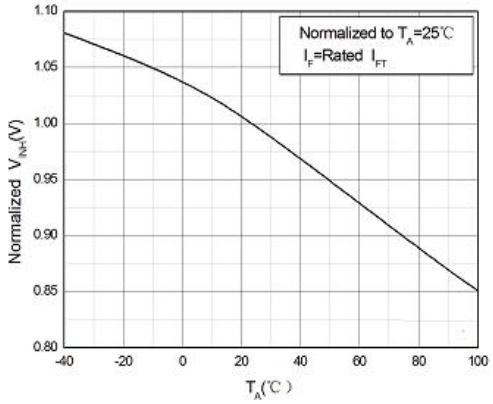

Fig.12 Normalized Leakage in Inhibit State vs. Ambient Temperature

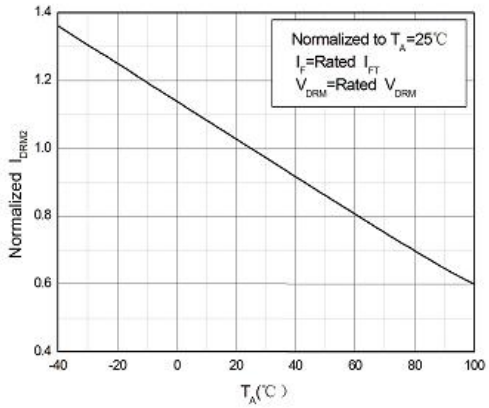

CHARACTERISTIC CURVES

Fig.13 Turn On Time vs. Forward Current

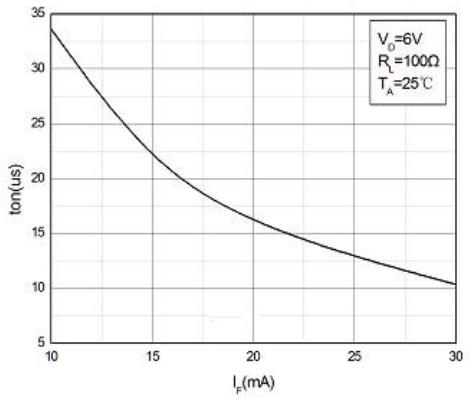

Fig.14 Turn On Time vs. Ambient Temperature

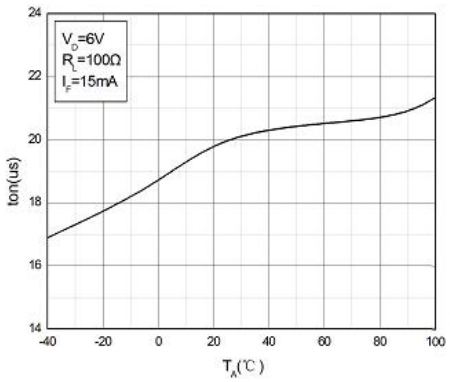

TEST CIRCUITS

Fig.15 Test Circuits of Turn On Time

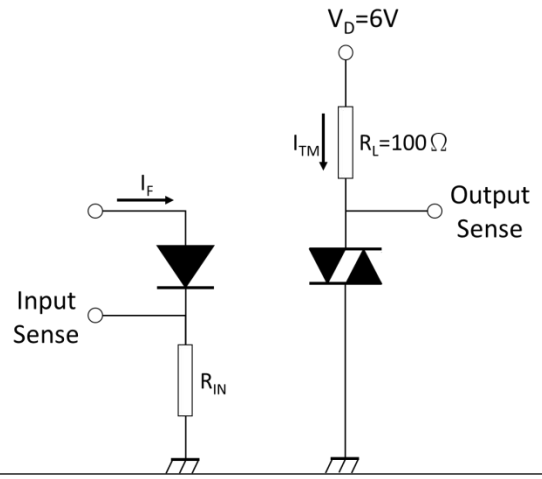

Fig.16 Waveforms of Turn On Time

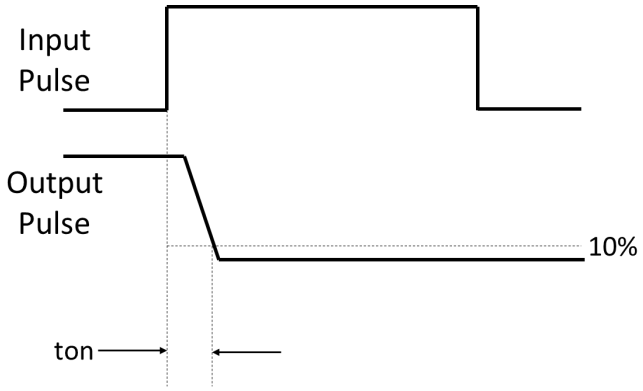

Fig.17 Test Circuits of dV/dt

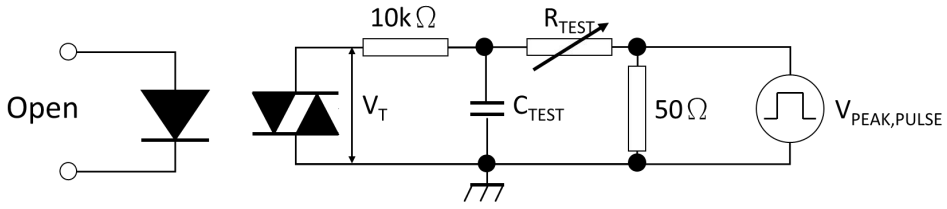

Fig.18 Waveforms of dV/dt

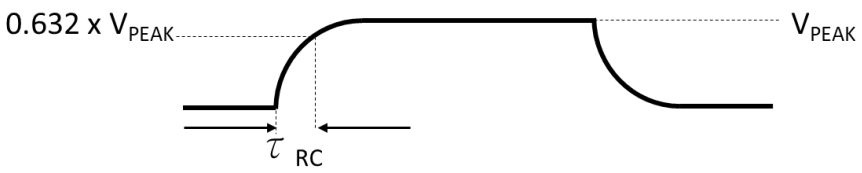

$$dv/dt = \frac{0.632 \times V_{PEAK}}{\tau_{RC}}$$

PACKAGE DIMENSIONS (Dimensions in mm unless otherwise stated)

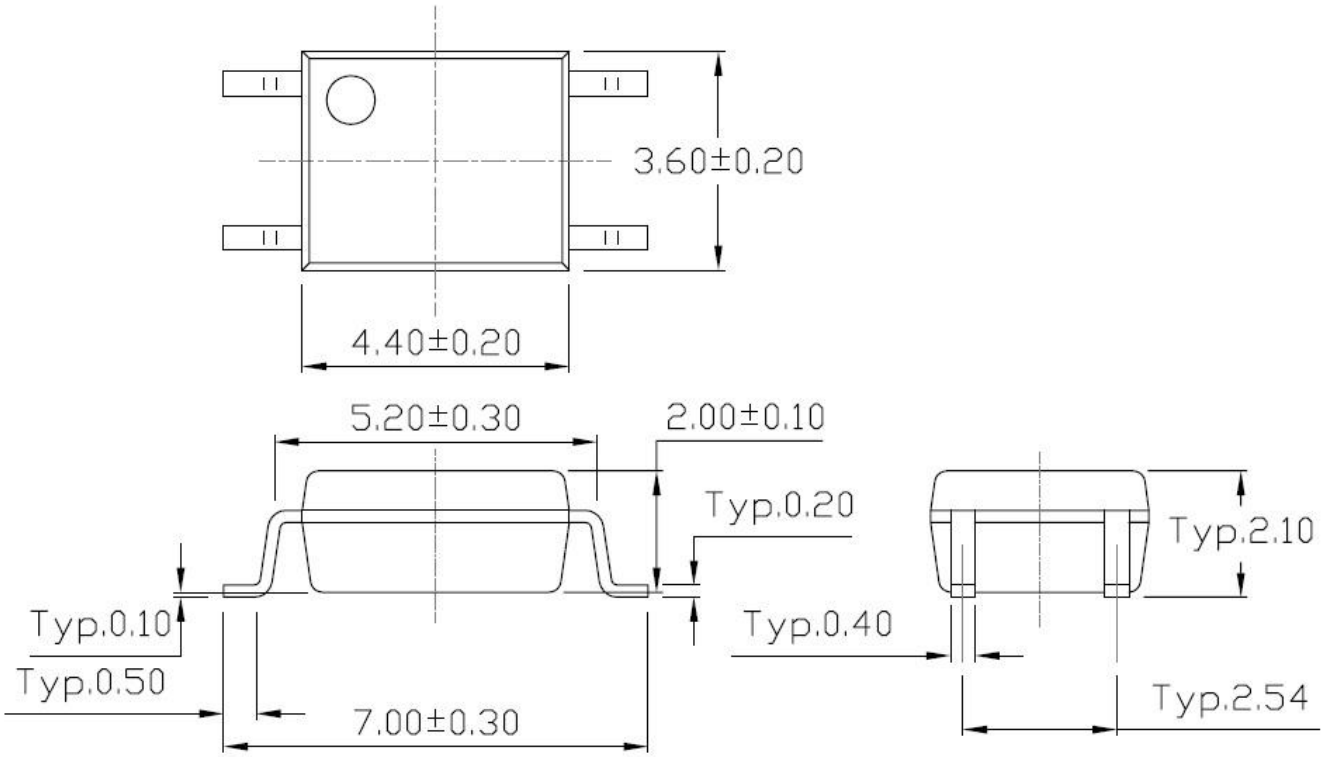

Recommended Solder Mask (Dimensions in mm unless otherwise stated)

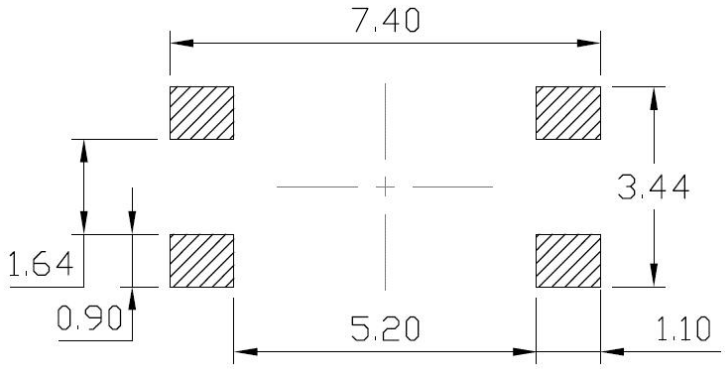

CARRIER TAPE SPECIFICATIONS (Dimensions in mm unless otherwise stated)

Option T1

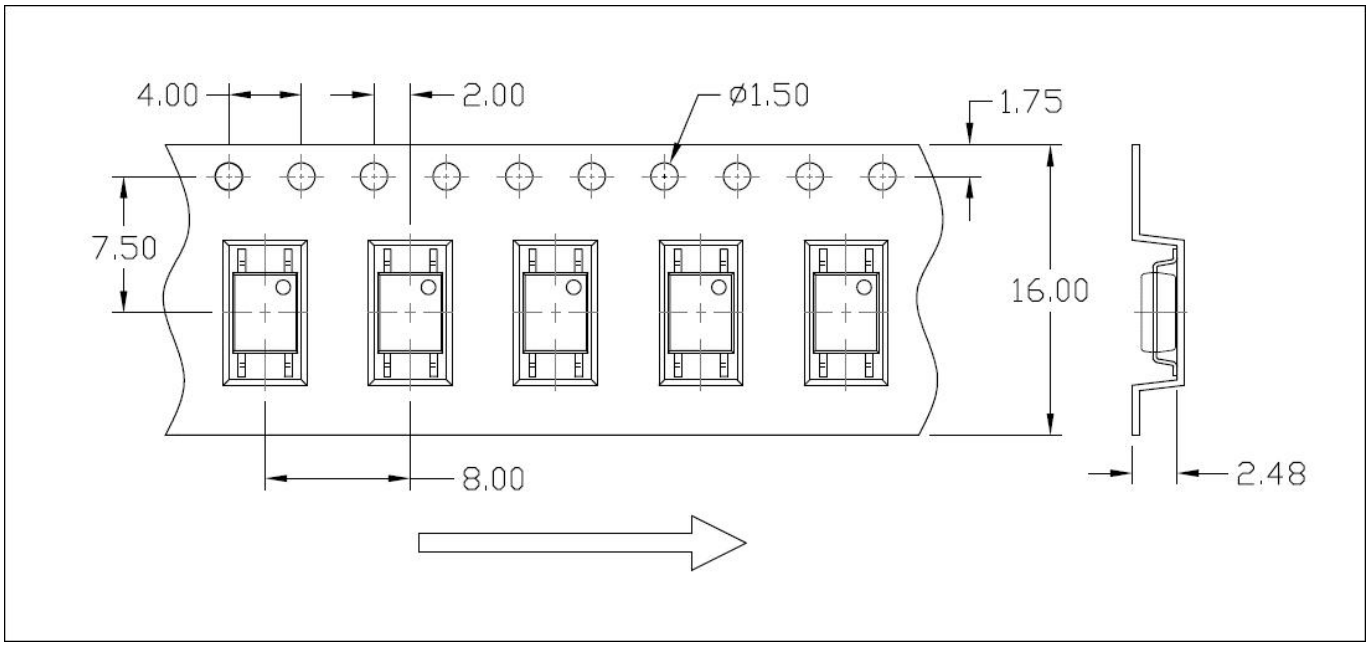

Option T2

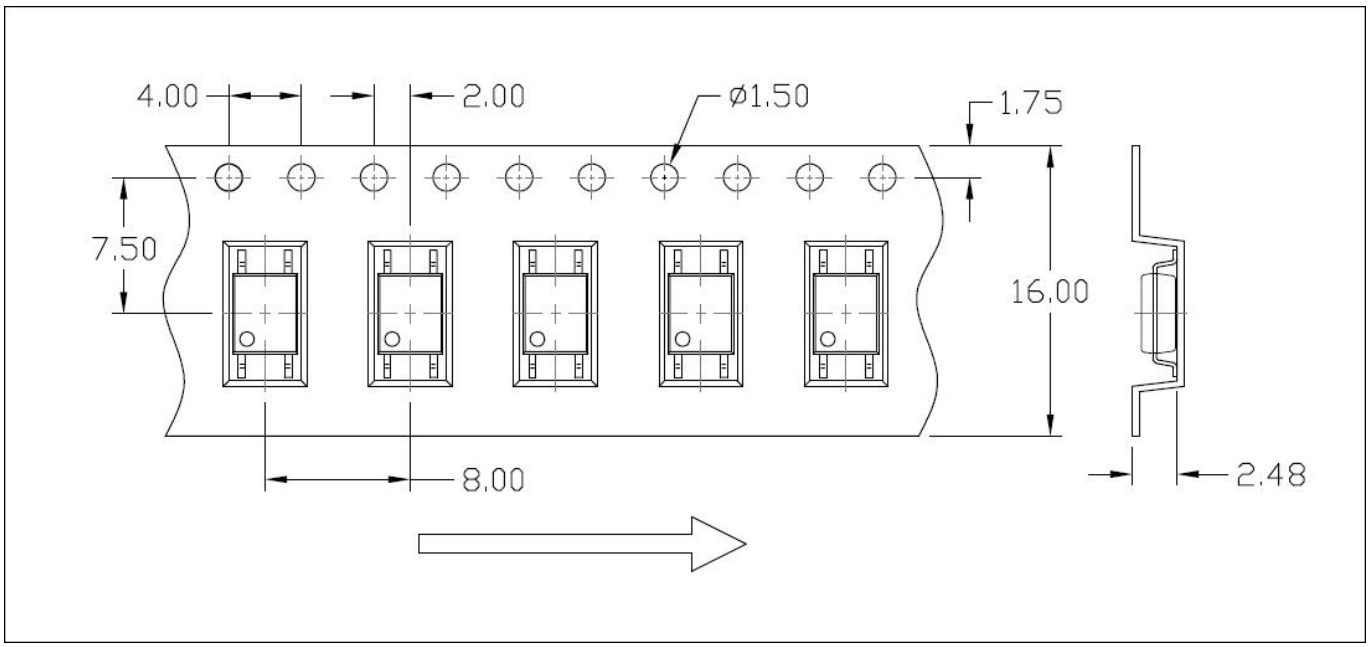

REEL SPECIFICATIONS (Dimensions in mm unless otherwise stated)

Option T1 & T2

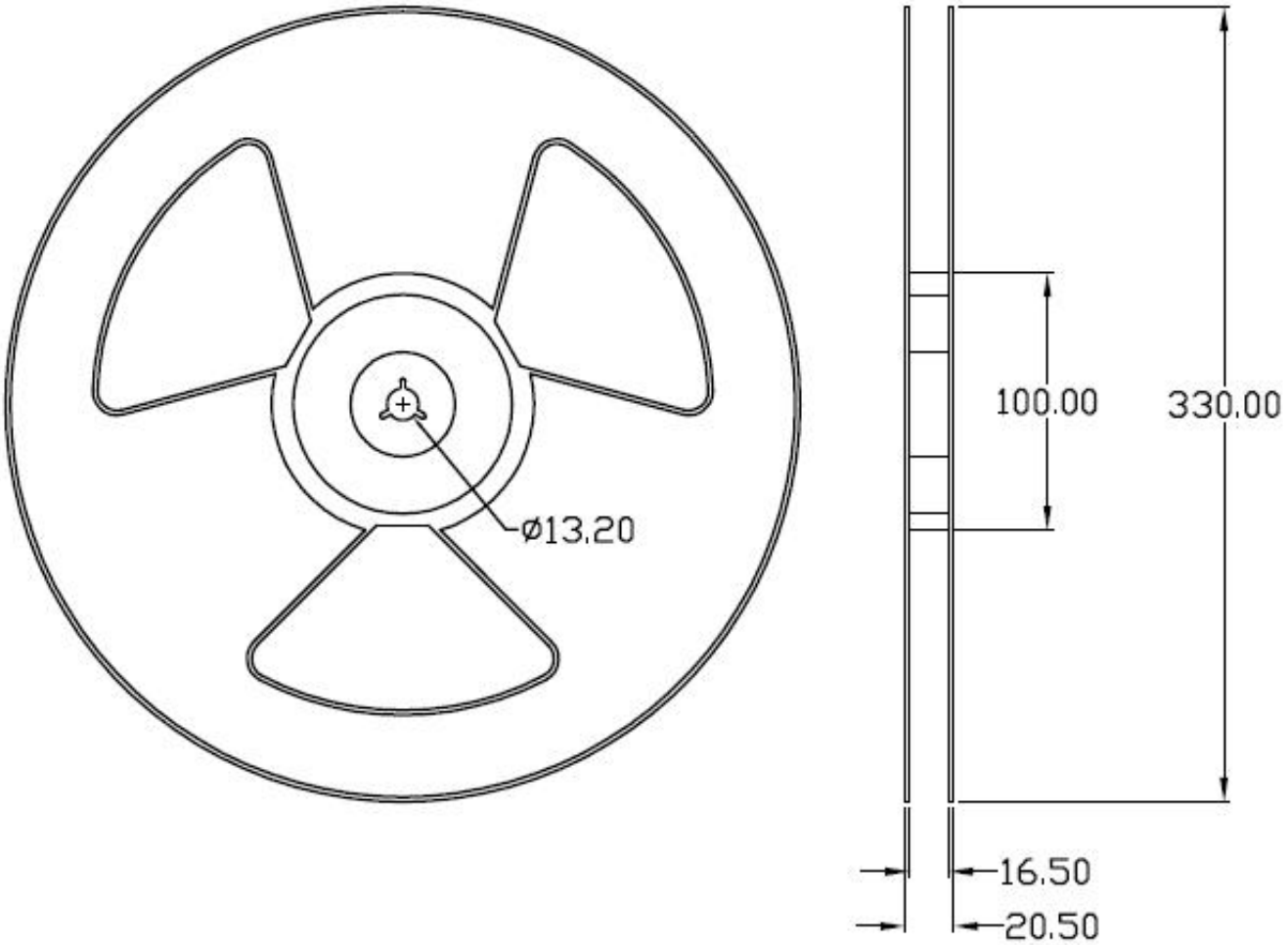

BOX SPECIFICATIONS (Reel Type)

Inner Box

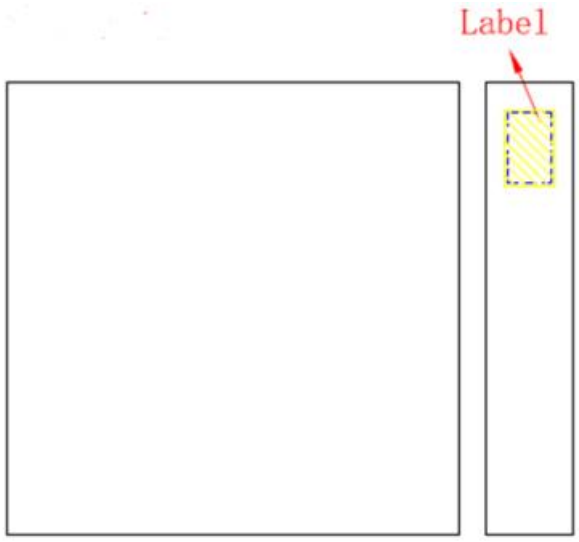

- L x W x H = 36cm x 36cm x 6.9cm

Outer Box

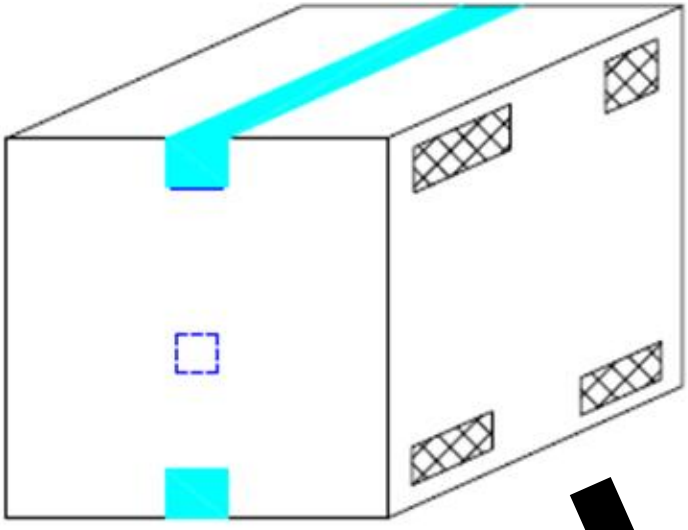

- Option1：L x W x H = 45cm x 38cm x 38cm
- Option2：L x W x H = 39cm x 38cm x 38cm

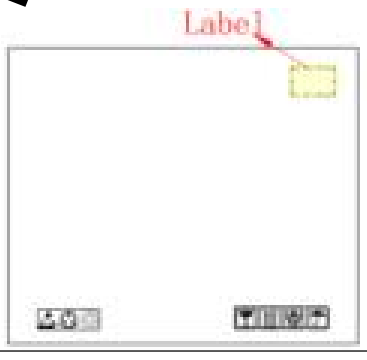

ORDERING AND MARKING INFORMATION

MARKING INFORMATION

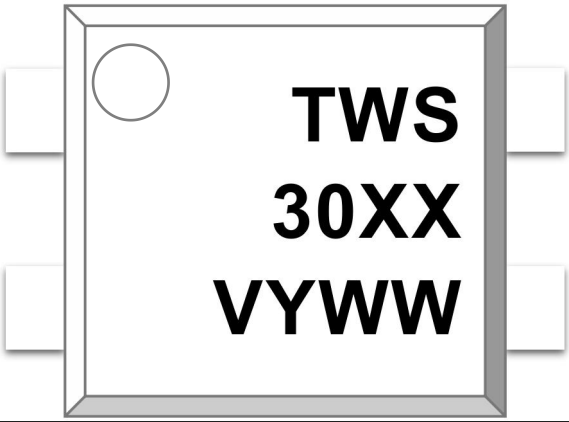

TWS : Company Abbr.
30XX : Part Number
V : VDE Option
Y : Fiscal Year
WW : Work Week

ORDERING INFORMATION

TWSM30XX(Z)-GV(ZF)

TWS – Company Abbr.
M30XX – Part Number
(31/32/33/41/42/43/61/62/63)
Z – Tape and Reel Option (T1/T2)
G – Green
V – VDE Option (V or None)
ZF – Custom code

LABEL INFORMATION

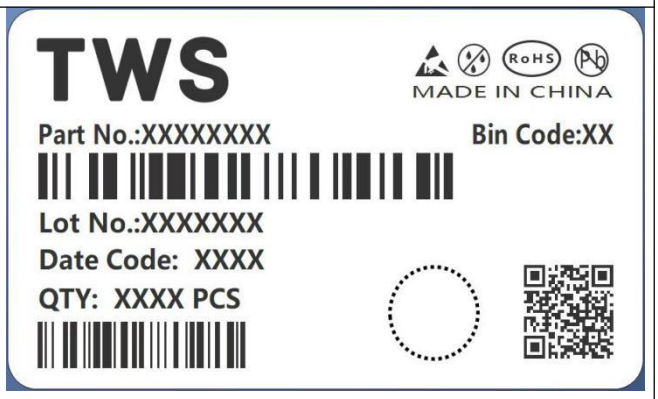

PACKING QUANTITY

Option	Quantity	Quantity – Inner box	Quantity – Outer box
T1	3000 Units/Reel	3 Reels/Inner box	5 Inner box/Outer box = 45k Units
T2	3000 Units/Reel	3 Reels/Inner box	5 Inner box/Outer box = 45k Units

REFLOW INFORMATION

REFLOW PROFILE

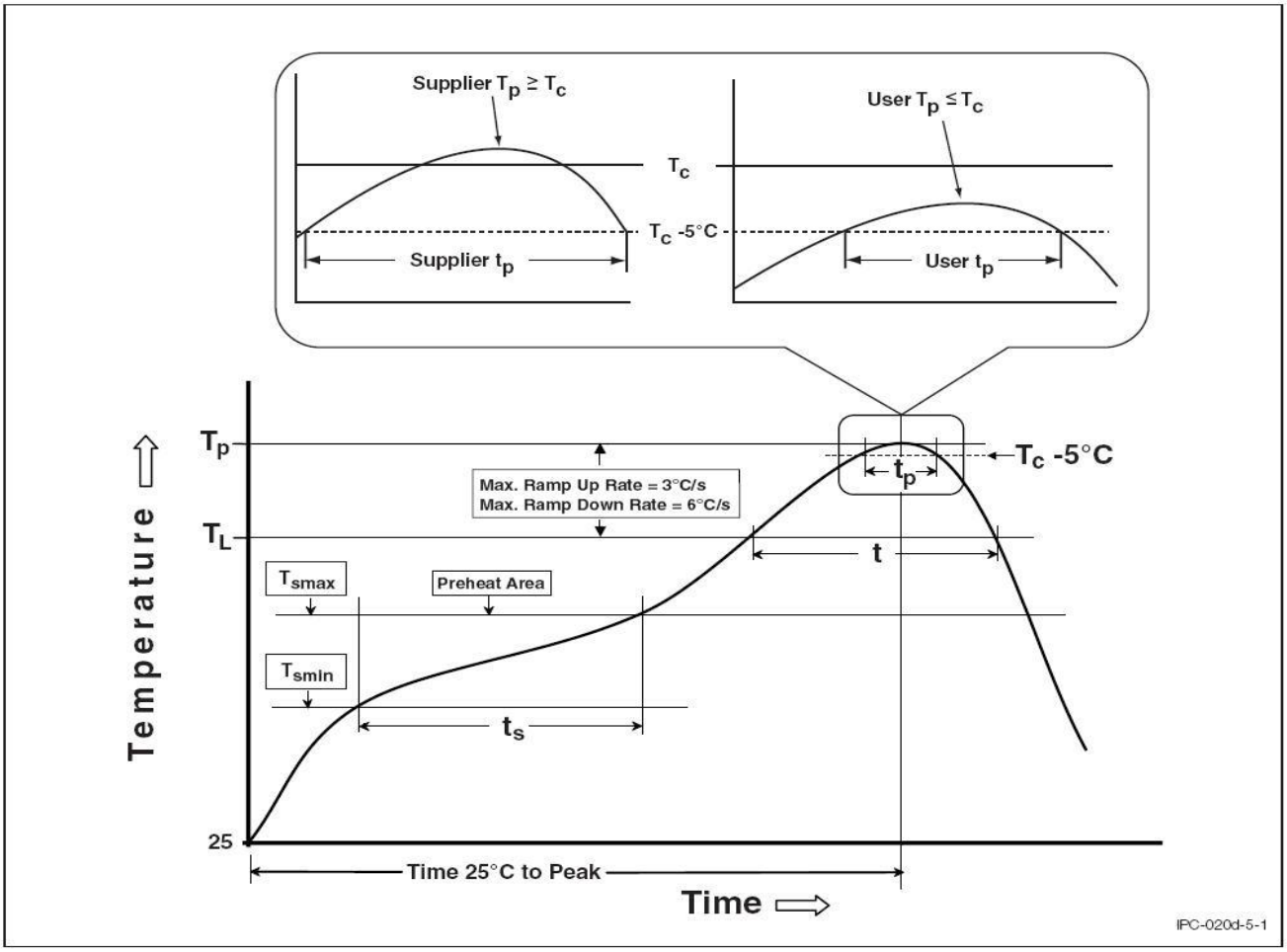

Profile Feature	Sn-Pb Assembly Profile	Pb-Free Assembly Profile
Temperature Min. (Tsmin)	100	150°C
Temperature Max. (Tsmax)	150	200°C
Time (ts) from (Tsmin to Tsmax)	60-120 seconds	60-120 seconds
Ramp-up Rate (tL to tP)	3°C/second max.	3°C/second max.
Liquidous Temperature (TL)	183°C	217°C
Time (tL) Maintained Above (TL)	60 – 150 seconds	60 – 150 seconds
Peak Body Package Temperature	235°C +0°C / -5°C	260°C +0°C / -5°C
Time (tP) within 5°C of 260°C	20 seconds	30 seconds
Ramp-down Rate (TP to TL)	6°C/second max	6°C/second max
Time 25°C to Peak Temperature	6 minutes max.	8 minutes max.

DISCLAIMER

- TWS is continually improving the quality, reliability, function and design. TWS reserves the right to make changes without further notices.
- The characteristic curves shown in this datasheet are representing typical performance which are not guaranteed.
- TWS makes no warranty, representation or guarantee regarding the suitability of the products for any particular purpose or the continuing production of any product. To the maximum extent permitted by applicable law, TWS disclaims (a) any and all liability arising out of the application or use of any product, (b) any and all liability, including without limitation special, consequential or incidental damages, and (c) any and all implied warranties, including warranties of fitness for particular
- The products shown in this publication are designed for the general use in electronic applications such as office automation, equipment, communications devices, audio/visual equipment, electrical application and instrumentation purpose, non-infringement and merchantability.
- This product is not intended to be used for military, aircraft, automotive, medical, life sustaining or lifesaving applications or any other application which can result in human injury or death.
- Please contact TWS sales agent for special application request.
- Immerge unit's body in solder paste is not recommended.
- Parameters provided in datasheets may vary in different applications and performance may vary over time. All operating parameters, including typical parameters, must be validated in each customer application by the customer's technical experts. Product specifications do not expand or otherwise modify TWS's terms and conditions of purchase, including but not limited to the warranty expressed therein.
- Discoloration might be occurred on the package surface after soldering, reflow or long-time use. It neither impacts the performance nor reliability.