REV.	DESCRIPTION	ECN NO.	NAME	DATE

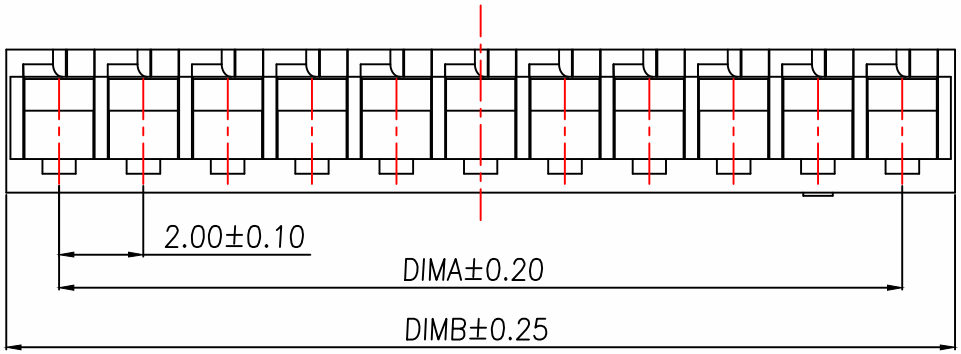

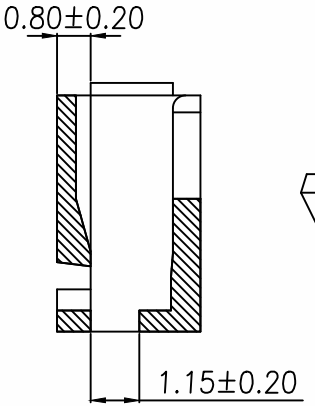

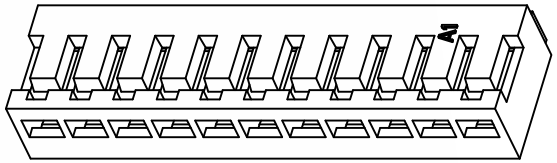

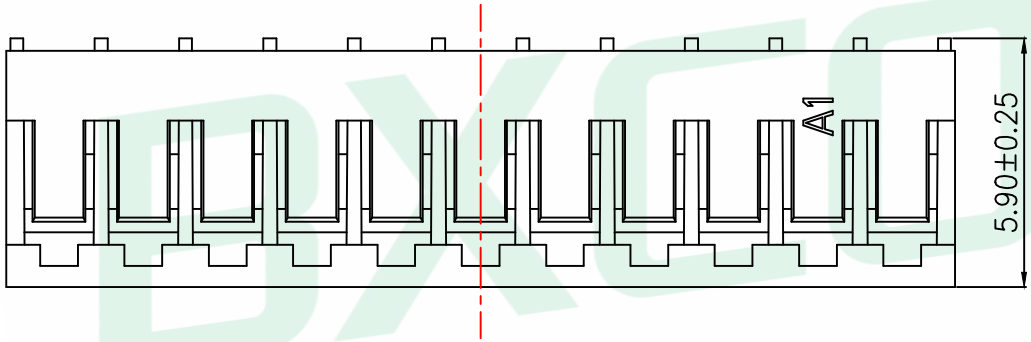

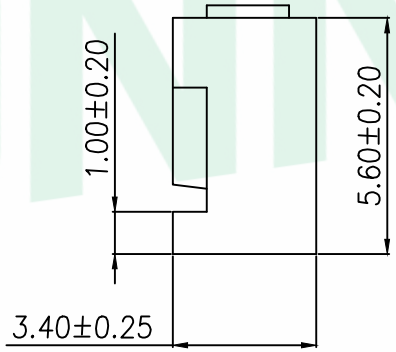

PART NO	PIN	A	B
WF-JC2.0-2PC	2	2.00	4.5
WF-JC2.0-3PC	3	4.00	6.5
WF-JC2.0-4PC	4	6.00	8.5
WF-JC2.0-5PC	5	8.00	10.5
WF-JC2.0-6PC	6	10.00	12.5
WF-JC2.0-7PC	7	12.00	14.5
WF-JC2.0-8PC	8	14.00	16.5
WF-JC2.0-9PC	9	16.00	18.5
WF-JC2.0-10PC	10	18.00	20.5
WF-JC2.0-11PC	11	20.00	22.5
WF-JC2.0-12PC	12	22.00	24.5
WF-JC2.0-13PC	13	24.00	26.5
WF-JC2.0-14PC	14	26.00	28.5
WF-JC2.0-15PC	15	28.00	30.5
WF-JC2.0-16PC	16	30.00	32.5
WF-JC2.0-17PC	17	32.00	34.5
WF-JC2.0-18PC	18	34.00	36.5
WF-JC2.0-19PC	19	36.00	38.5
WF-JC2.0-20PC	20	38.00	40.5

技术指标(Technical Index):

1.温度范围(Temperature range):-25°C~+85°C.
2.额定电压(Rated voltage):250V AC,DC.
3.耐电压(Withstanding Voltage):1000V AC/minute.
4.接触电阻(Contact resistance):≤20mΩ.
5.绝缘电阻(Insulation resistance):≥1000MΩ.
6.额定电流(Rated Current): 2A AC,DC.

材料:

1.塑胶:PA66 白色

GENERAL TOLERANCE					
DIM.	TOL.				
X.	±0.50				
X.X	±0.20				
X.XX	±0.10				
GENERAL ANGLE:	±1°				
DONGGUAN BAOXUN PRECISION TECHNOLOGY CO., LTD					
TITLE: JC2.0 弯插板胶芯					
DWG. NO.: WF-JC2.0-XPC				CHECKED: MAX	
PART NO.: WF-JC2.0-XPC				DRAWN: ELLA	
UNIT: mm	SCALE: none	SHEET: 1 of 1	DWG. SIZE: A4	LAYER: bxconn	APPROVED: WILL