REACH & RoHS COMPLIANT

REV.	ECN / DESCRIPTION	BY	DATE
A0	NEW	ZG.Hu	2017.12.22

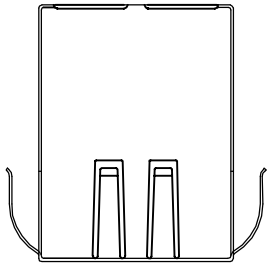

TOP VIEW

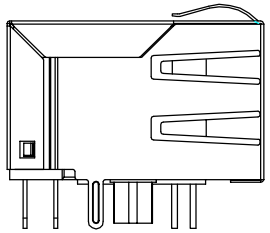

LEFT SIDE VIEW

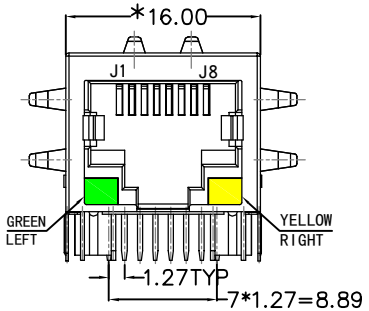

FRONT VIEW

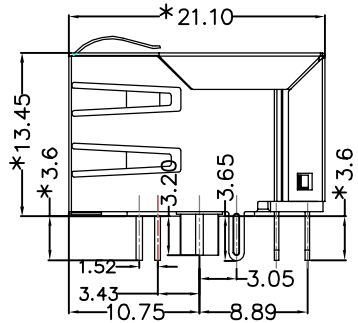

RIGHT SIDE VIEW

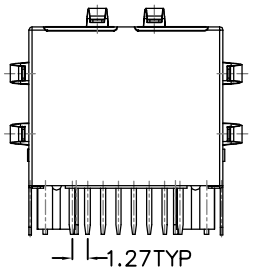

BACK VIEW

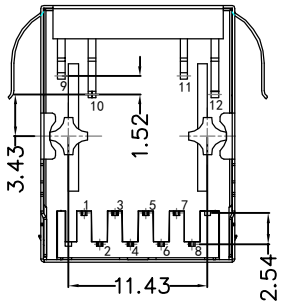

BOTTOM VIEW

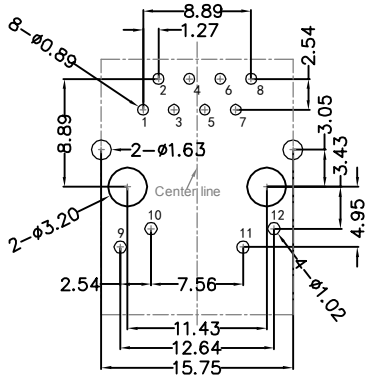

RECOMMENDED PCB LAYOUT
VIEWED FROM COMPONENT SIDE

MATERIAL:

HOUSING : PBT,UL94V-0,BLACK.
TERMINALS BRACKET: PBT,UL94V-0,BLACK.
SHIELD: C2680,T=0.20MM,NICKEL PLATING ON ALL AREA.
TERMINAL: PHOSPHOR BRONZE C5210,T=0.35MM,
6U" GOLD PLATING ON CONTACT AREA.

MECHANICAL:

DURABILITY : 750 CYCLES MIN.
MATING FORCE : 23N MAX.
OPERATING TEMPERATURE: -40°C~+85°C.
STORAGE TEMPERATURE: -40°C~+85°C.
ALL CRITICAL DIMENSIONS WITH "*"

DGKYD
东莞市科优达电子科技有限公司
Dong Guan Ke You Da Electronic Tech.Co.,Ltd
ADD:No.1 LiHe Street,LiHeng Village,Qingxi town, DongGuan City,GuangDong Province
Tel:+86-0769-87334608; Fax:+86-0769-87847129 WWW.DGKYD.COM

TITLE: TAB-DOWN 1X1 10/100BASE	SIZE A4	UNITS MM[INCH]	GENERAL TOLERANCES UNLESS SPECIFIED		APPROVED BY: JP.Gong
PART NO.: KRJ-13GYQNL	SACLE 1:1	REV A0	x±0.35	x°±3.0°	CHECKED BY: TW.Xu
			.x±0.30	.x°±2.0°	
REMARK:	SHEET 1/3		.xx±0.25	.xx°±1.5°	DESIGND BY: ZG.Hu
			.xxx±0.10	.xxx°±1.0°	

REACH & RoHS COMPLIANT

REV.	ECN / DESCRIPTION	BY	DATE
A0	NEW	ZG.Hu	2017.12.22

RECOMMENDED PANEL CUTOUT(REFFERENCE ONLY):

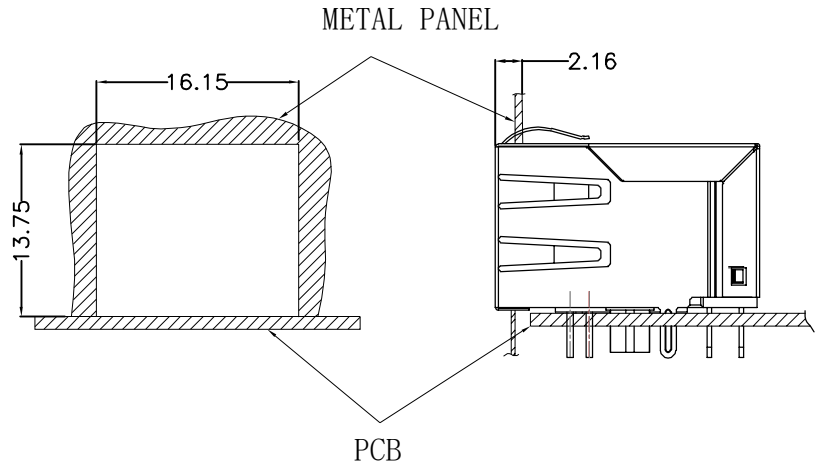

UNIT: MM / INCH
TOLERANCES: ±0.10 / 0.004
REFERENCE ONLY

KEEP-OUT AREA(COMPONENT SIDE VIEW):

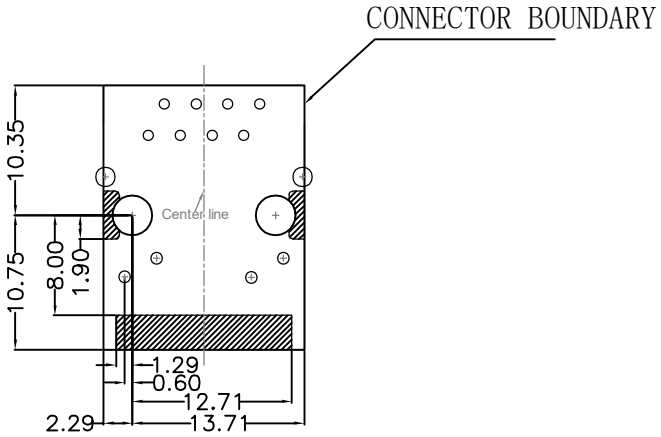

PLUG-IN SIDE

UNIT: MM / INCH
TOLERANCES: ±0.10 / 0.004

DGKYD
东莞市科优达电子科技有限公司
Dong Guan Ke You Da Electronic Tech.Co.,Ltd
ADD:No.1 LiHe Street,LiHeng Village,Qingxi town, DongGuan City,GuangDong Province
Tel:+86-0769-87334608; Fax:+86-0769-87847129 WWW.DGKYD.COM

TITLE: TAB-DOWN 1X1 10/100BASE	SIZE A4	UNITS MM[INCH]	GENERAL TOLERANCES UNLESS SPECIFIED		APPROVED BY: JP.Gong
PART NO.: KRJ-13GYQNL	SACLE 1:1	REV A0	x±0.35	x°±3.0°	CHECKED BY: TW.Xu
REMARK:	SHEET 2/3		.x±0.30	.x°±2.0°	
			.xx±0.25	.xx°±1.5°	DESIGND BY: ZG.Hu
			.xxx±0.10	.xxx°±1.0°	

REACH & RoHS COMPLIANT

REV.	ECN / DESCRIPTION	BY	DATE
A0	NEW	ZG.Hu	2017.12.22

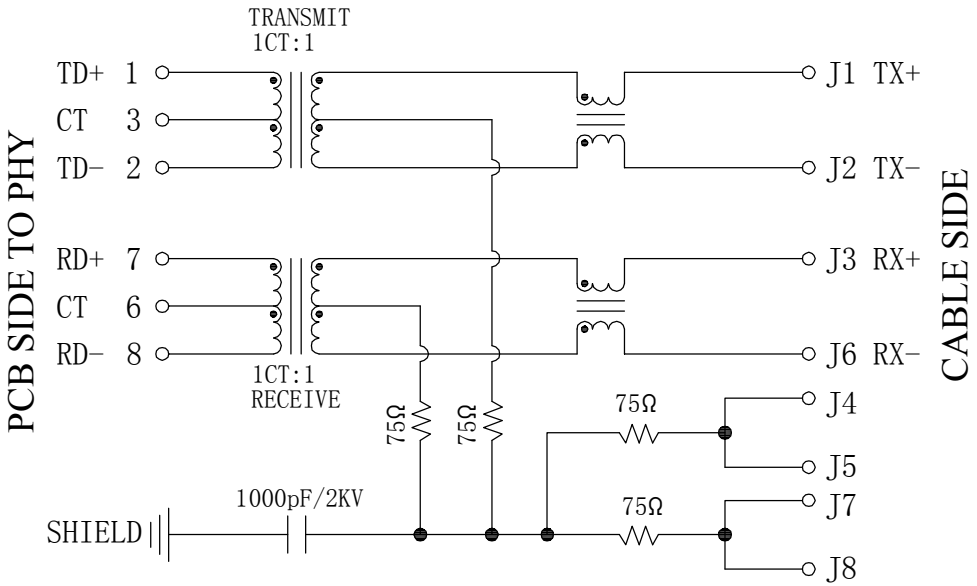

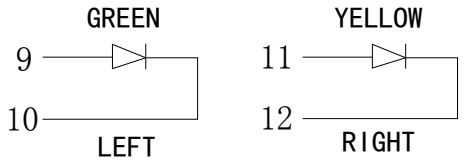

Electrical:

1.Turn ratio:1~2:J1~J2=1CT:1CT(±2%).
7~8:J3~J6=1CT:1CT(±2%).
2.OCL:350uH Min.at 100KHz 100mV 8mA DC.
3.Insertion Loss: -1.0 dB Max 1~100MHz.
4.Return loss: -20dB Min 1~10MHz;
-16dB Min 10~30MHz.
-12dB Min 30~60MHz.
-10dB Min 60~80MHz.
5.Cross talk: -40dB Min 1~30MHz;
-35dB Min 30~60MHz;
-30dB Min 60~100MHz;
6.CMR: -30dB Min 1~100MHz;
7.Hi-Pot:1500V AC & 2250V DC
6S 1mA PRI TO SEC

LED Specification

Standard LED Color	LED Wavelength	Foward(A)	Foward(V)
Green	568nm	20mA	1.85-2.45V
Yellow	585nm	20mA	1.7-2.2V

DGKYD

东莞市科优达电子科技有限公司
Dong Guan Ke You Da Electronic Tech.Co.,Ltd
ADD:No.1 LiHe Street,LiHeng Village,Qingxi town, DongGuan City,GuangDong Province
Tel:+86-0769-87334608; Fax:+86-0769-87847129 WWW.DGKYD.COM

TITLE:	SIZE	UNITS	GENERAL TOLERANCES UNLESS SPECIFIED		APPROVED BY:
TAB-DOWN 1X1 10/100BASE	A4	MM[INCH]			JP.Gong
PART NO.: KRJ-13GYQNL	SACLE 1:1	REV A0	x±0.35	x°±3.0°	CHECKED BY: TW.Xu
			.x±0.30	.x°±2.0°	
REMARK:	SHEET 2/3		.xx±0.25	.xx°±1.5°	DESIGND BY: ZG.Hu
			.xxx±0.10	.xxx°±1.0°	

REACH & RoHS COMPLIANT

PROFILE OF WAVE SOLDER

REV.	ECN / DESCRIPTION	BY	DATE
A0	NEW	ZG.Hu	2017.12.22

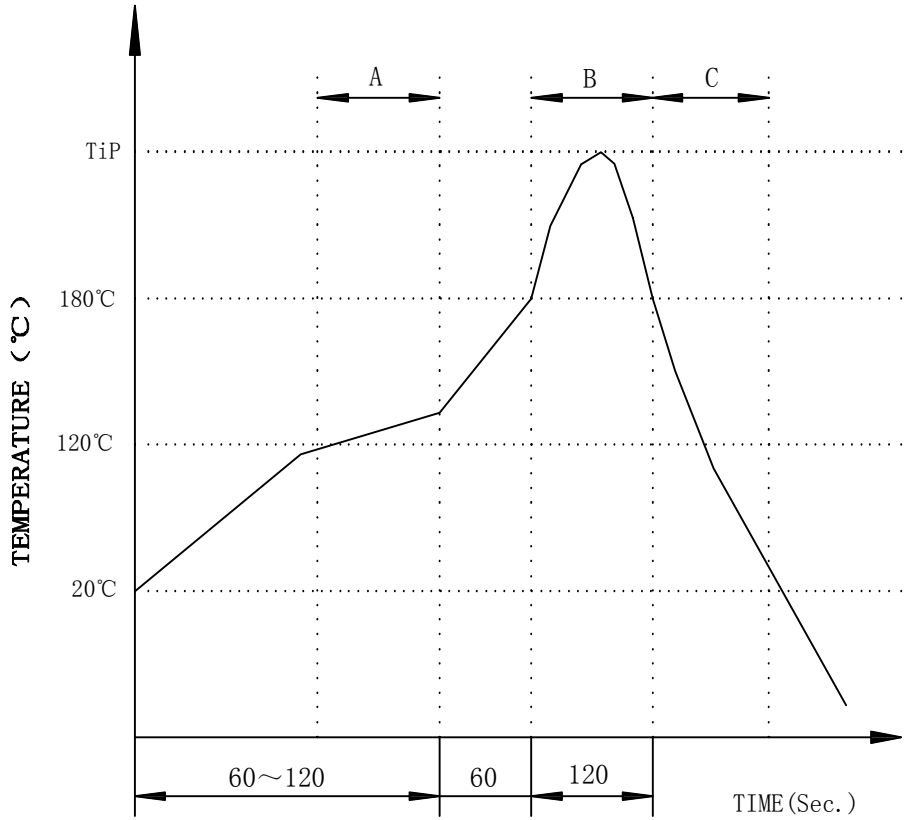

A.Preheating B.Soldering C.Gradual Cooling
Tip temperature:260±5°C.
Tip temperature time:5Sec Max.
Tip melting point of Sn96.5/Ag3/Cu0.5:217°C.

Remarks: after wave soldering, the plastic positioning columns of the product which under the PCB will be slightly melted, but it won't affect its function.

DGKYD
东 莞 市 科 优 达 电 子 科 技 有 限 公 司
Dong Guan Ke You Da Electronic Tech.Co.,Ltd
ADD:No.1 LiHe Street,LiHeng Village,Qingxi town, DongGuan City,GuangDong Province
Tel:+86-0769-87334608; Fax:+86-0769-87847129 WWW.DGKYD.COM

TITLE: TAB-DOWN 1X1 10/100BASE	SIZE A4	UNITS MM[INCH]	GENERAL TOLERANCES UNLESS SPECIFIED		APPROVED BY: JP.Gong
PART NO.: KRJ-13GYQNL	SACLE 1:1	REV A0	x±0.35	x°±3.0°	CHECKED BY: TW.Xu
			.x±0.30	.x°±2.0°	
REMARK:	SHEET 3/3		.xx±0.25	.xx°±1.5°	DESIGND BY: ZG.Hu
			.xxx±0.10	.xxx°±1.0°	