RoHS COMPLIANT

REV.	ECN / DESCRIPTION	BY	DATE
A0	NEW	ZG.HU	2017.10.18
A1	外露PIN3.2更新为3.0	ZG.HU	2024.7.25

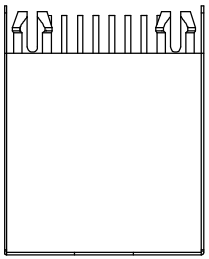

TOP VIEW

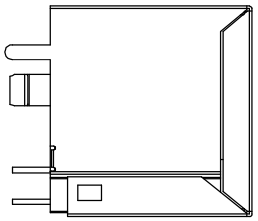

LEFT SIDE VIEW

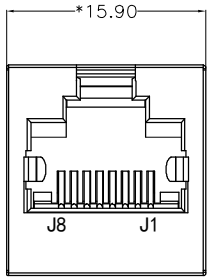

FRONT VIEW

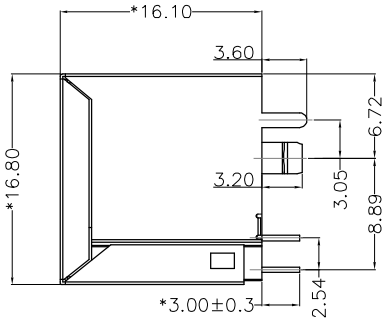

RIGHT SIDE VIEW

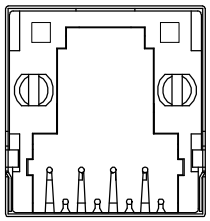

BACK VIEW

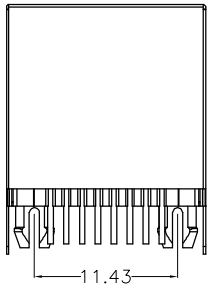

BOTTOM VIEW

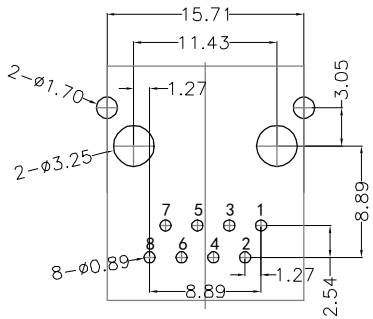

RECOMMENDED PCB LAYOUT
VIEWED FROM COMPONENT SIDE

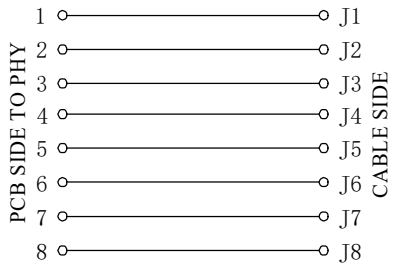

MATERIAL:
HOUSING:PA46,UL94V-0,BLACK.
TERMINAL: PHOSPHOR BRONZE Ø=0.46MM, G/FU" GOLD PLATING.
SHIELD: C2680,T=0.20MM,20U" MIN NICKEL PLATING ON ALL AREA.

MACHANICAL:
DURABILITY: 750 CYCLES MIN,12.5MM/MINUTE.
INSERTION FORCE: 2.2KG.F MAX.
RETENTION STRENGTH : 7.7KG.F BETWEEN JACK AND PLUG.
OPERATING TEMPERATURE: -40℃～+85℃.
STORAGE TEMPERATURE: -40°C~+85°C.
ALL CRITICAL DIMENSIONS WITH "*"

ELECTRICAL:
VOLTAGE: 125 VOLTS AC.
CURRENT RATING : 1.5AMP.
DIELECTRIC STRENGTH: 1000 VAC RMS 50HZ OR 60HZ,1MIN.
INSULATION RESISTANCE: 500 MEGA OHMS MIN. INITIAL AFTER 500V DC FOR 1 MINUTE.
CONTACT RESISTANCE: SINGLE TERMINAL 30 MILLIOHMS MAX. INITIAL 50 MILLIOHMS MAX. AFTER DURABILITY TEST.

DGKYD

东莞市科优达电子科技有限公司
Dong Guan Ke You Da Electronic Tech.Co.,Ltd
Tel:+86-0769-87334608; Fax:+86-0769-87847129 WWW.DGKYD.COM

TITLE: 180° TAB-UP 8P8C 带屏蔽无灯	SIZE A4	UNITS MM[INCH]	GENERAL TOLERANCES UNLESS SPECIFIED	APPROVED BY: JP.Gong
PART NO.: DGKYD52241188GWA3D1Y1027	SACLE 1:1	REV A1	x±0.35 / x°±3.0° / .x±0.30 / .x°±2.0°	CHECKED BY: TW.Xu
REMARK:	SHEET 1/1		.xx±0.25 / .xx°±1.5° / .xxx±0.10 / .xxx°±1.0°	DESIGND BY: ZG.Hu