REACH & RoHS COMPLIANT

REV.	ECN / DESCRIPTION	BY	DATE
A0	NEW	ZG.Hu	2018.03.13

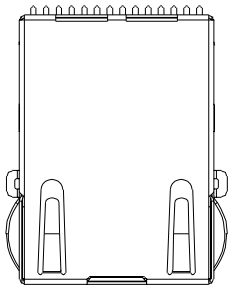

TOP VIEW

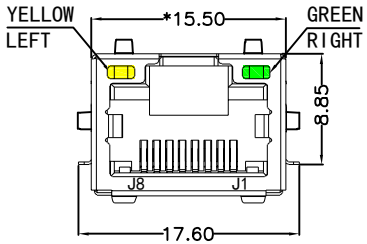

FRONT VIEW

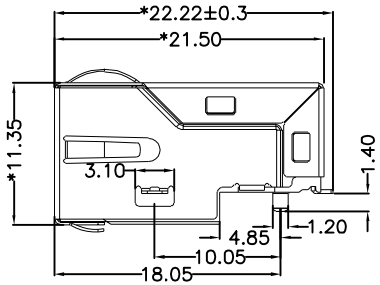

RIGHT SIDE VIEW

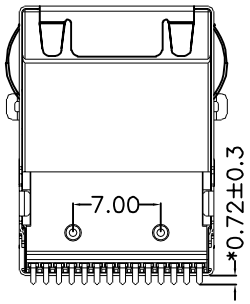

BOTTOM VIEW

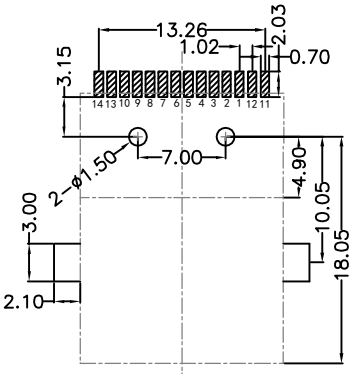

RECOMMENDED PCB LAYOUT
VIEWED FROM COMPONENT SIDE

MATERIAL:

HOUSING: LCP,UL94V-0,BLACK.
TERMINALS BRACKET: LCP,UL94V-0,BLACK.
SHIELD: C2680,T=0.20MM,NICKEL PLATING ON ALL AREA.
TERMINAL: PHOSPHOR BRONZE C5191,T=0.35MM,
6U" GOLD PLATING ON CONTACT AREA.

MECHANICAL:

DURABILITY: 750 CYCLES MIN.
MATING FORCE: 23N MAX.
OPERATING TEMPERATURE: -40°C~+85°C.
STORAGE TEMPERATURE: -40°C~+85°C.
ALL CRITICAL DIMENSIONS WITH "*"

DGKYD

东莞市科优达电子科技有限公司
Dong Guan Ke You Da Electronic Tech.Co.,Ltd
Tel:+86-0769-87334608; Fax:+86-0769-87847129 WWW.DGKYD.COM

TITLE: TAB-UP 1X1 10/100/1000BASE 贴片	SIZE A4	UNITS MM[INCH]	GENERAL TOLERANCES UNLESS SPECIFIED		APPROVED BY: JP.Gong
PART NO.: KRJ-CB329YGZE3NL	SACLE 1:1	REV A0	x±0.35	x°±3.0°	CHECKED BY: TW.Xu
			.x±0.30	.x°±2.0°	
REMARK:	SHEET 1/4		.xx±0.25	.xx°±1.5°	DESIGND BY: ZG.Hu
			.xxx±0.10	.xxx°±1.0°	

REACH & RoHS COMPLIANT

REV.	ECN / DESCRIPTION	BY	DATE
A0	NEW	ZG.Hu	2018.03.13

Suggested Panel Opening:

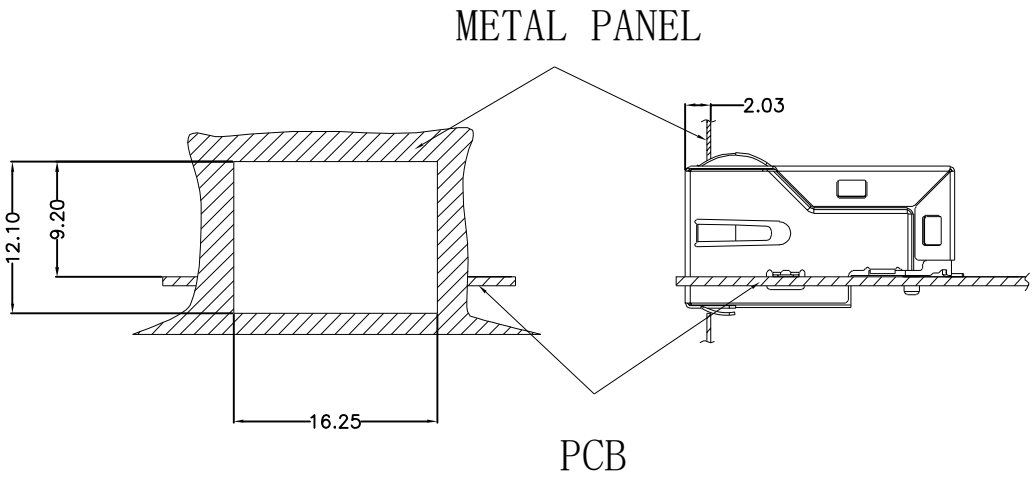

UNIT: mm / inch
Tolerances: ±0.10 / 0.004

Keep-Out Area (Component Side View):

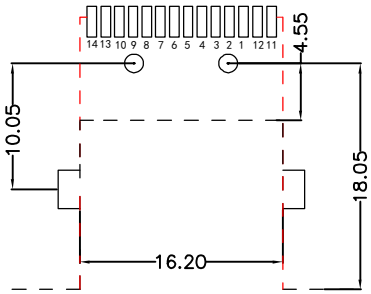

Plug In Side

UNIT: mm / inch
Tolerances: ±0.10 / 0.004

DGKYD
东莞市科优达电子科技有限公司
Dong Guan Ke You Da Electronic Tech.Co.,Ltd
Tel:+86-0769-87334608; Fax:+86-0769-87847129 WWW.DGKYD.COM

TITLE: TAB-UP 1X1 10/100/1000BASE 贴片	SIZE A4	UNITS MM[INCH]	GENERAL TOLERANCES UNLESS SPECIFIED		APPROVED BY: JP.Gong
PART NO.: KRJ-CB329YGZE3NL	SACLE 1:1	REV A0	x±0.35	x°±3.0°	CHECKED BY: TW.Xu
			.x±0.30	.x°±2.0°	
REMARK:	SHEET 2/4		.xx±0.25	.xx°±1.5°	DESIGND BY: ZG.Hu
			.xxx±0.10	.xxx°±1.0°	

REACH & RoHS COMPLIANT

REV.	ECN / DESCRIPTION	BY	DATE
A0	NEW	ZG.Hu	2018.03.13

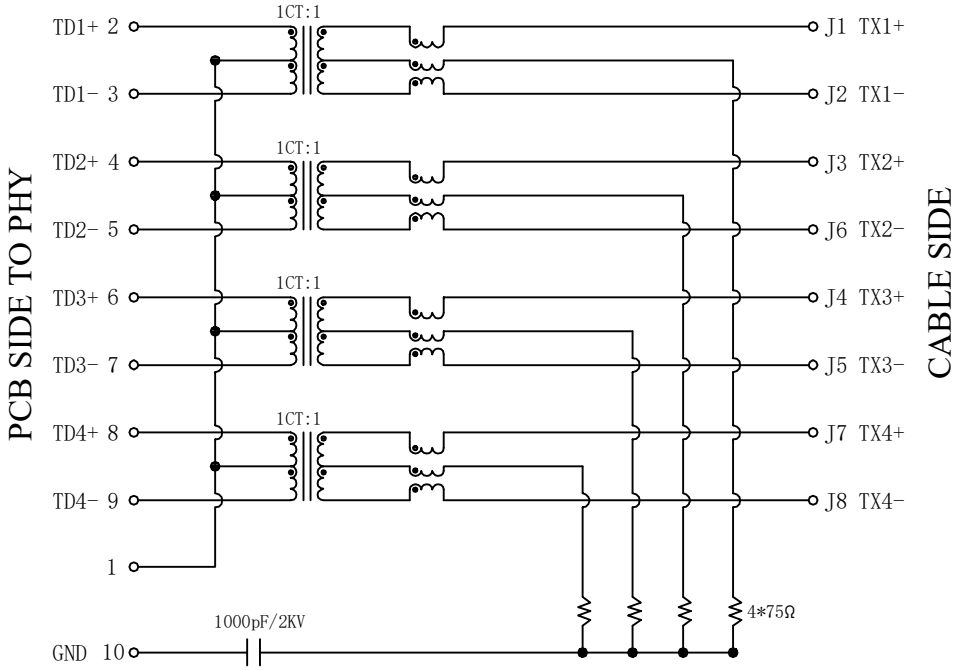

Electrical:

1.Turn ratio:2~3:J1~J2=1CT:1CT(±2%).
4~5:J3~J6=1CT:1CT(±2%).
6~7:J1~J2=1CT:1CT(±2%).
8~9:J3~J6=1CT:1CT(±2%).
2.OCL:350uH Min.at 100KHz 100mV 8mA DC.
3.Insertion Loss: -1.0 dB Max 1~100MHz.
-1.2 dB Max 100~125MHz.
4.Return loss: -16dB Min 1~40MHz;
-12dB Min 40~60MHz.
-10dB Min 60~80MHz.
-8dB Min 80~100MHz.
5.Cross talk: -30dB Min 1~100MHz;
6.CMR: -30dB Min 1~100MHz;
7.Hi-Pot:2250V DC 6S 1mA PRI TO SEC

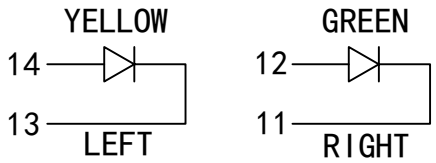

LED Specification

Standard LED Color	LED Wavelength	Foward(A)	Foward(V)
Green	568nm	20mA	1.85-2.45V
Yellow	585nm	20mA	1.7-2.2V

DGKYD

东莞市科优达电子科技有限公司
Dong Guan Ke You Da Electronic Tech.Co.,Ltd
Tel:+86-0769-87334608; Fax:+86-0769-87847129 WWW.DGKYD.COM

TITLE:	SIZE	UNITS	GENERAL TOLERANCES UNLESS SPECIFIED		APPROVED BY:
TAB-UP 1X1 10/100/1000BASE 贴片	A4	MM[INCH]			JP.Gong
PART NO.: KRJ-CB329YGZE3NL	SACLE 1:1	REV A0	x±0.35	x°±3.0°	CHECKED BY: TW.Xu
			.x±0.30	.x°±2.0°	
REMARK:	SHEET 3/4		.xx±0.25	.xx°±1.5°	DESIGND BY: ZG.Hu
			.xxx±0.10	.xxx°±1.0°	

REACH & RoHS COMPLIANT

REV.	ECN / DESCRIPTION	BY	DATE
A0	NEW	ZG.Hu	2018.03.13

PROFILE OF REFLOW SOLDERING

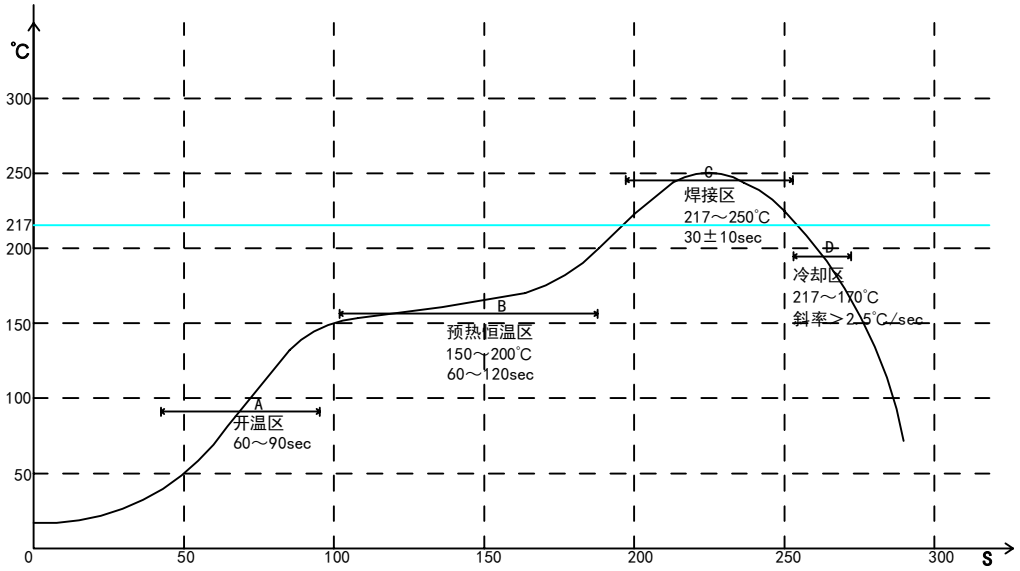

A.Temperature range of open
B.Preheat temperature zone
C.The welding zone
D.The cooling zone
Tip temperature:265±5°C.
Tip temperature time:30±10Sec.
Tip melting point of Sn96.5/Ag3/Cu0.5.

DGKYD

东莞市科优达电子科技有限公司
Dong Guan Ke You Da Electronic Tech.Co.,Ltd
Tel:+86-0769-87334608; Fax:+86-0769-87847129 WWW.DGKYD.COM

TITLE: TAB-UP 1X1 10/100/1000BASE 贴片	SIZE A4	UNITS MM[INCH]	GENERAL TOLERANCES UNLESS SPECIFIED		APPROVED BY: JP.Gong
PART NO.: KRJ-CB329YGZE3NL	SACLE 1:1	REV A0	x±0.35	x°±3.0°	CHECKED BY: TW.Xu
			.x±0.30	.x°±2.0°	
REMARK:	SHEET 4/4		.xx±0.25	.xx°±1.5°	DESIGND BY: ZG.Hu
			.xxx±0.10	.xxx°±1.0°	