REACH & RoHS COMPLIANT

REV.	ECN / DESCRIPTION	BY	DATE
A0	NEW	ZG.Hu	2017.10.7

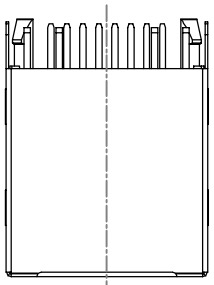

TOP VIEW

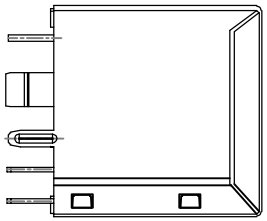

LEFT SIDE VIEW

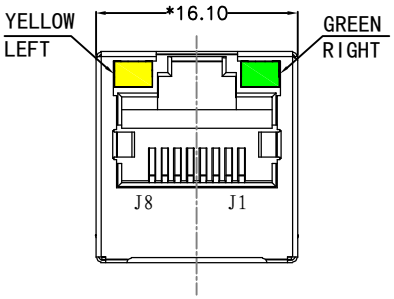

FRONT VIEW

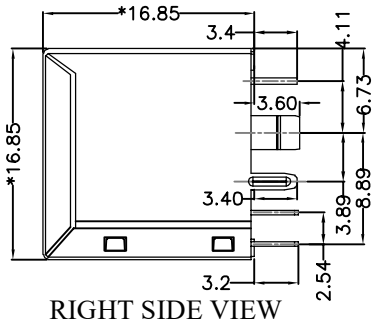

RIGHT SIDE VIEW

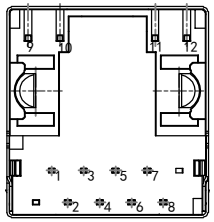

BACK VIEW

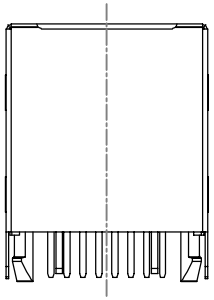

BOTTOM VIEW

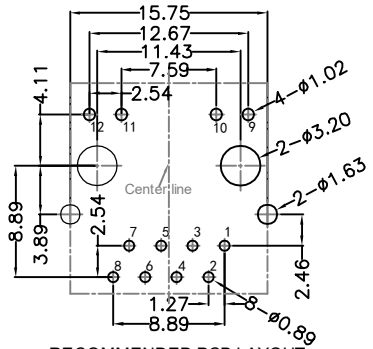

RECOMMENDED PCB LAYOUT
VIEWED FROM COMPONENT SIDE

MATERIAL:

HOUSING: PBT,UL94V-0,BLACK.
TERMINALS BRACKET: PBT,UL94V-0,BLACK.
SHIELD: C2680,T=0.20MM,NICKEL PLATING ON ALL AREA.
TERMINAL: PHOSPHOR BRONZE C5210,T=0.35MM,
6U" GOLD PLATING ON CONTACT AREA.

MECHANICAL:

DURABILITY: 750 CYCLES MIN.
MATING FORCE: 23N MAX.
OPERATING TEMPERATURE: -40°C~+85°C.
STORAGE TEMPERATURE: -40°C~+85°C.
ALL CRITICAL DIMENSIONS WITH "*"

DGKYD

东 莞 市 科 优 达 电 子 科 技 有 限 公 司
Dong Guan Ke You Da Electronic Tech.Co.,Ltd
Tel:+86-0769-87334608; Fax:+86-0769-87847129 WWW.DGKYD.COM

TITLE: 180° TAB-UP 1X1	SIZE A4	UNITS MM[INCH]	GENERAL TOLERANCES UNLESS SPECIFIED		APPROVED BY: JP.Gong
PART NO.: DGKYD511B035AA1A8D	SACLE 1:1	REV A0	x±0.35	x°±3.0°	CHECKED BY: TW.Xu
			.x±0.30	.x°±2.0°	
REMARK:	SHEET 1/4		.xx±0.25	.xx°±1.5°	DESIGND BY: ZG.Hu
			.xxx±0.10	.xxx°±1.0°	

REACH & RoHS COMPLIANT

REV.	ECN / DESCRIPTION	BY	DATE
A0	NEW	ZG.Hu	2017.10.7

Suggested Panel Opening:

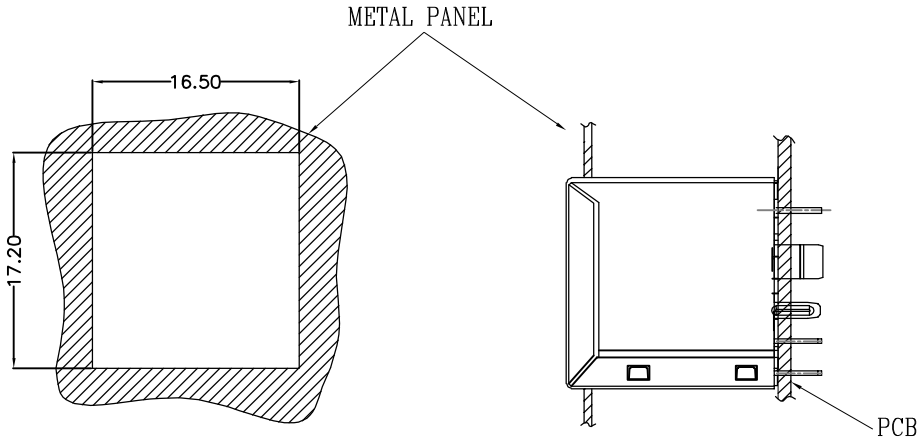

UNIT: mm / inch
Tolerances: ±0.10 / 0.004

Keep-Out Area (Component Side View):

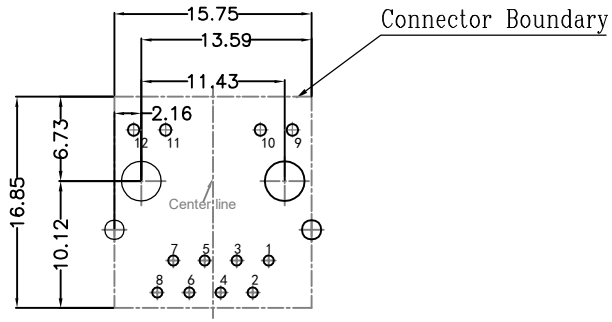

UNIT: mm / inch
Tolerances: ±0.10 / 0.004

DGKYD
东莞市科优达电子科技有限公司
Dong Guan Ke You Da Electronic Tech.Co.,Ltd
Tel:+86-0769-87334608; Fax:+86-0769-87847129 WWW.DGKYD.COM

TITLE: 180° TAB-UP 1X1	SIZE A4	UNITS MM[INCH]	GENERAL TOLERANCES UNLESS SPECIFIED		APPROVED BY: JP.Gong
PART NO.: DGKYD511B035AA1A8D	SACLE 1:1	REV A0	x±0.35	x°±3.0°	CHECKED BY: TW.Xu
REMARK:	SHEET 2/4		.x±0.30	.x°±2.0°	
			.xx±0.25	.xx°±1.5°	DESIGND BY: ZG.Hu
			.xxx±0.10	.xxx°±1.0°	

REACH & RoHS COMPLIANT

REV.	ECN / DESCRIPTION	BY	DATE
A0	NEW	ZG.Hu	2017.10.7



Electrical:

1.Voltage ratign:125V AC.
2.Insulation resistance: 500 mega ohms minimum initial
after 500V DC for 1minute.
3.Low level Contact resistance: Single terminal 30 milliohms Max initial
50 milliohms maximum after durabilty test.

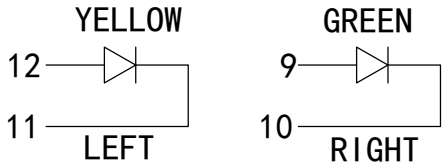

LED Specification

Standard LED Color	LED Wavelength	Foward(A)	Foward(V)
Green	568nm	20mA	1.85-2.45V
Yellow	585nm	20mA	1.7-2.2V

DGKYD
东莞市科优达电子科技有限公司
Dong Guan Ke You Da Electronic Tech.Co.,Ltd
Tel:+86-0769-87334608; Fax:+86-0769-87847129 WWW.DGKYD.COM

TITLE: 180° TAB-UP 1X1	SIZE A4	UNITS MM[INCH]	GENERAL TOLERANCES UNLESS SPECIFIED	APPROVED BY: JP.Gong
PART NO.: DGKYD511B035AA1A8D	SACLE 1:1	REV A0	x±0.35 / x°±3.0° / .x±0.30 / .x°±2.0°	CHECKED BY: TW.Xu
REMARK:	SHEET 3/4		.xx±0.25 / .xx°±1.5° / .xxx±0.10 / .xxx°±1.0°	DESIGND BY: ZG.Hu

REACH & RoHS COMPLIANT

PROFILE OF WAVE SOLDER

REV.	ECN / DESCRIPTION	BY	DATE
A0	NEW	ZG.Hu	2017.10.7

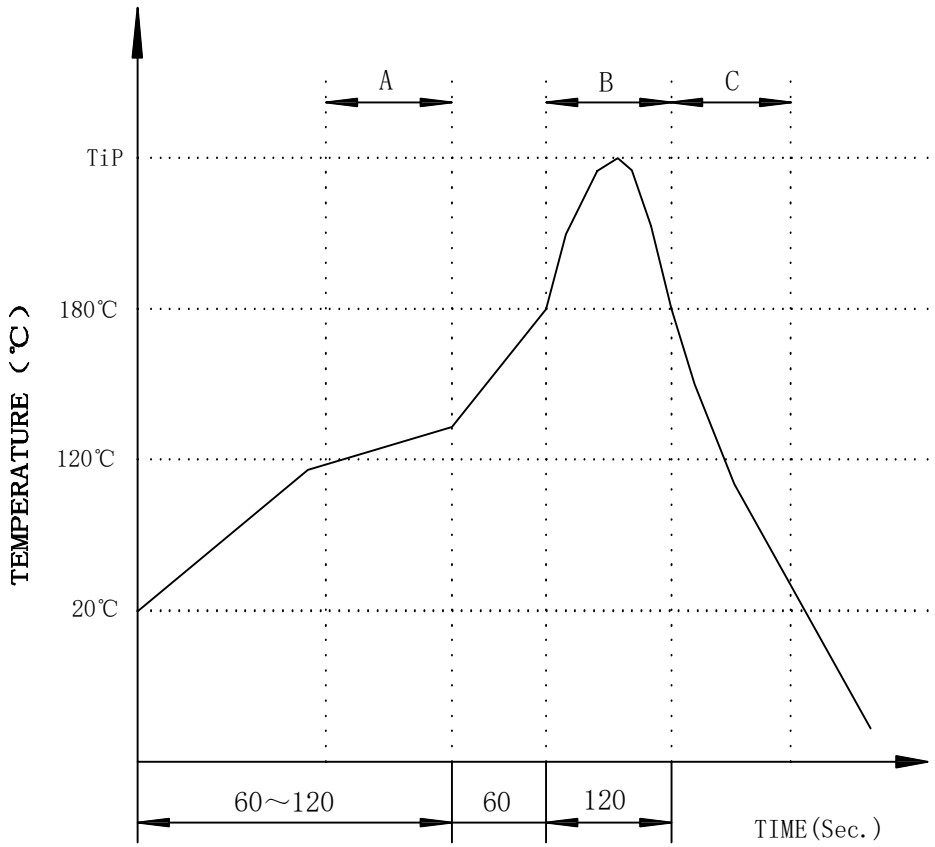

A.Preheating B.Soldering C.Gradual Cooling
Tip temperature:260±5°C.
Tip temperature time:5Sec Max.
Tip melting point of Sn96.5/Ag3/Cu0.5:217°C.

Remarks: after wave soldering, the plastic positioning columns of the product which under the PCB will be slightly melted, but it won't affect its function.

DGKYD
东莞市科优达电子科技有限公司
Dong Guan Ke You Da Electronic Tech.Co.,Ltd
Tel:+86-0769-87334608; Fax:+86-0769-87847129 WWW.DGKYD.COM

TITLE: 180° TAB-UP 1X1	SIZE A4	UNITS MM[INCH]	GENERAL TOLERANCES UNLESS SPECIFIED		APPROVED BY: JP.Gong
PART NO.: DGKYD511B035AA1A8D	SACLE 1:1	REV A0	x±0.35	x°±3.0°	CHECKED BY: TW.Xu
			.x±0.30	.x°±2.0°	
REMARK:	SHEET 4/4		.xx±0.25	.xx°±1.5°	DESIGND BY: ZG.Hu
			.xxx±0.10	.xxx°±1.0°	