REV.	ZONE	DESCRIPTION	DESIGN	DATE
B		NEW		

RoHS Compliant

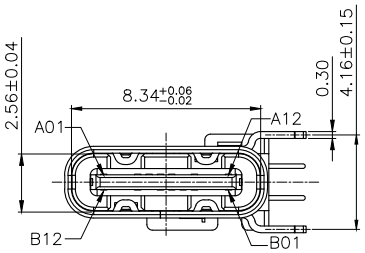

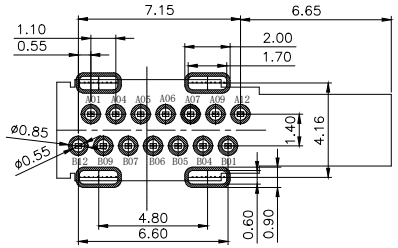

RECOMMENDED P.C.B. LAYOUT
TOLERANCE UNSPECIFIED ±0.05mm

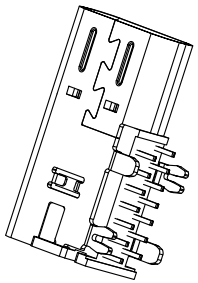

3D VIEW

SPECIFICATION:

1、ELECTRICAL:
1.1 CURRENT RATING:5.0A;
1.2 CONTACT RESISTANCE:40mΩ Max;
1.3 DIELECTRIC WITHSTANDING VOLTAGE:100V AC;
1.4 INSULATION RESISTANCE:100 MΩ MIN;

2、MECHANICAL;
2.1 MATING FORCE:5~20N;
2.2 UNMATING FORCE:8~20N;
2.3 DURABILITY:10000 CYCLES;6~20N AFTER DURABILITY TEST;

3、MATERIAL:
3.1 HOUSING&MOLDING: BLACK LCP UL94V-0;
3.2 TERMINAL:C2680 T=0.20mm;
3.3 SHELL:SUS304 T=0.30mm;
3.4 MID PLATE:SUS304 T=0.30mm;

4、PLATING SPECIFICATION:
4.1 TERMINAL:CONTACT POINT GOLD PLATED 3u "Min
PIN WELDING AREA TIN PLATED 80u" Min.
4.2 NI 40u" Min. UNDER PLATED OVER ALL.
4.2 SHELL:PLATED Ni 50u" Min(Salt spray 48H)

5、ELECTROPLATED PRODUCTS NEED TO UNDERGO TIN ADHESION TESTING: THE TIN ADHESION AREA SHOULD REACH OVER 95%.

6、SMT REFLOW SOLDERING (PEAK VALUE 260 °C ± 5 ° C) SHALL BE FREE OF BLISTERING, GLUE MELTING AND POOR COLOR CHANGE (DEFORMATION WITHIN TOLERANCE)

7、OPERATING TEMPERATURE: -40°C~+85°C

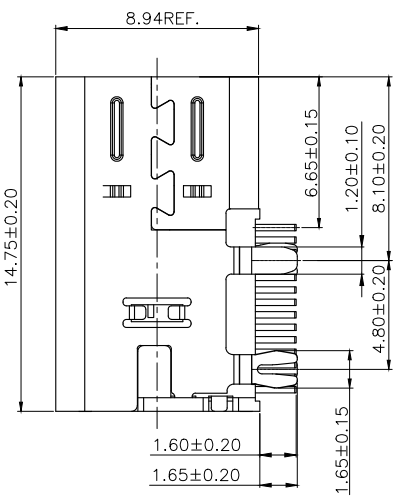

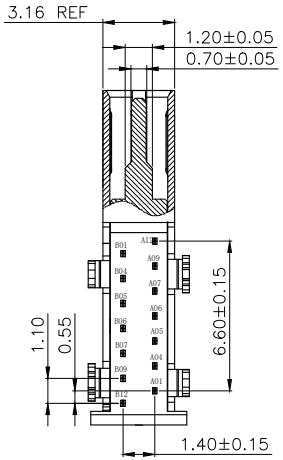

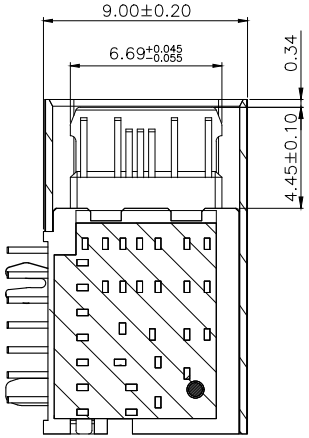

剖视图

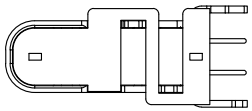

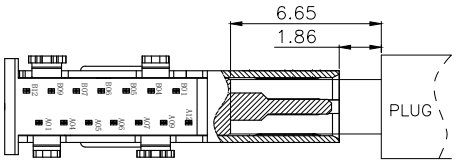

A1	GND	B12	GND
A4	VBUS	B9	VBUS
A5	CC1		
A6	D+	B7	Dn2
A7	D-	B6	Dp2
		B5	CC2
A9	VBUS	B4	VBUS
A12	GND	B1	GND
PIN	SIGNAL NAME	PIN	SIGNAL NAME

X.	±0.50	X.°	± 2°
.X	±0.30	.X°	± 1°
.XX	±0.10	.XX°	± 0.5°
.XXX	± 0.05		

UNITS mm

MAT'L

FINISH

Q'TY

THESE DRAWINGS AND SPECIFICATIONS ARE THE PROPERTY OF SHENZHEN CHUANGYUE TECHNOLOGY CO.,LTD. AND SHALL NOT BE REPRODUCED, COPIED OR USED IN ANY MANNER WITHOUT THE PRIOR WRITTEN CONSENT OF SHENZHEN CHUANGYUE TECHNOLOGY CO., LTD

广东创粤科技有限公司

TITLE:
Type-C 14P 母座 侧插普通款带凸筋 针长1.60 黑色LCP

APPD:

CHKD:

DR:

DWG NO.:
TYPE-C-14P-15096

SCALE	SHEET	REV.
1/1	1/1	A1

RoHS Compliant

REV.	ZONE	DESCRIPTION	DESIGN	DATE
B		NEW		

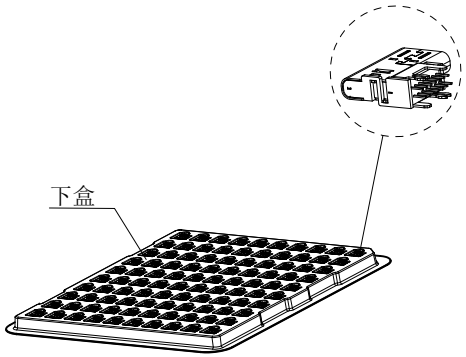

① 100Pcs/盒

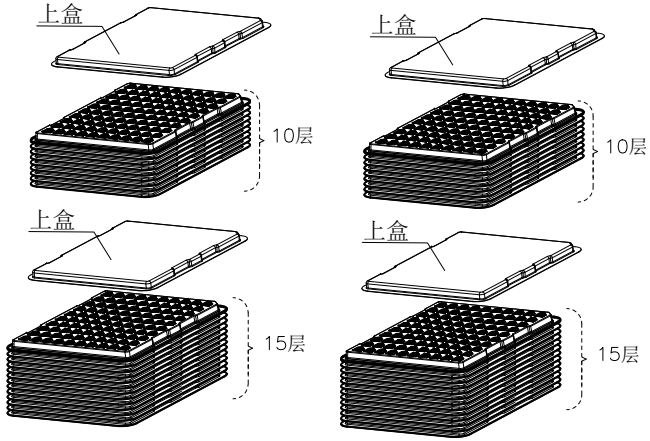

② 25层/叠 (2.5K)

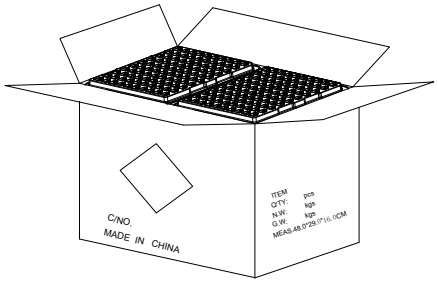

③ 2叠x2=5K/箱

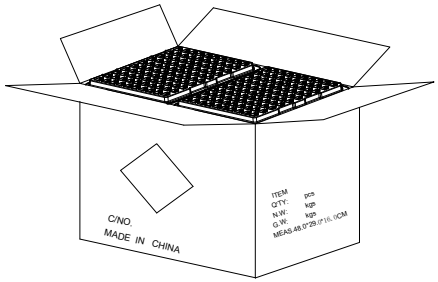

④ 每箱竖放25盒*2,若尾数箱在空间处加装填充物.

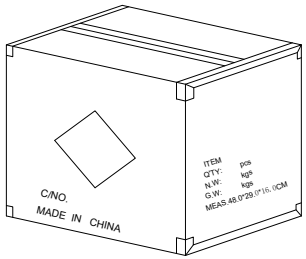

⑤ 外箱用透明胶纸带封"工"字型.

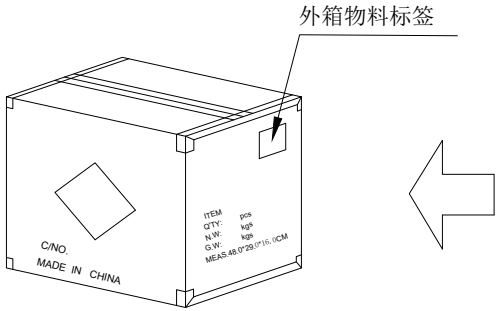

⑥ 依图示粘贴产品或RoHS标签.

备注:
1. 每盒装成品100Pcs;
2. 2叠15层+2叠10层,每叠顶面加一个上盖;
3. 每箱装50盒(5K);
4. 外箱尺寸与规格: 48.0*29.0*16.0CM
5. 外箱用透明胶纸带封"工"字型;

序号	物料名称	物料编号	规 格	描 述
04	纸箱	B-05-0017	480mm*290mm*160mm	1 PCS
03	上盖	B-01-0018	PET透明 T0.50*L280*W230*H11mm	4 PCS
02	下盒	B-01-0017	PET透明 T0.45*L280*W230*H11mm	50 PCS
01	连接器	JSX-TC14FA-3009	14PIN, DIP	5000 PCS

X. ±0.50	X.° ± 2°	UNITS mm	广东创粤科技有限公司
.X ±0.30	.X° ± 1°	MAT'L	TITLE: Type-C 14P 母座 侧插普通款带凸筋 针长1.60 黑色LCP
.XX ±0.10	.XX° ± 0.5°		
.XXX ± 0.05		FINISH	APPD: / DWG NO.: TYPE-C-14P-15096
THESE DRAWINGS AND SPECIFICATIONS ARE THE PROPERTY OF SHENZHEN CHUANGYUE TECHNOLOGY CO.,LTD. AND SHALL NOT BE REPRODUCED, COPIED OR USED IN ANY MANNER WITHOUT THE PRIOR WRITTEN CONSENT OF SHENZHEN CHUANGYUE TECHNOLOGY CO., LTD		Q'TY	CHKD: / SCALE 1/1 / SHEET 1/1 / REV. A1
			DR: