REV.	DESCRIPTION	DATE
	新版发行	

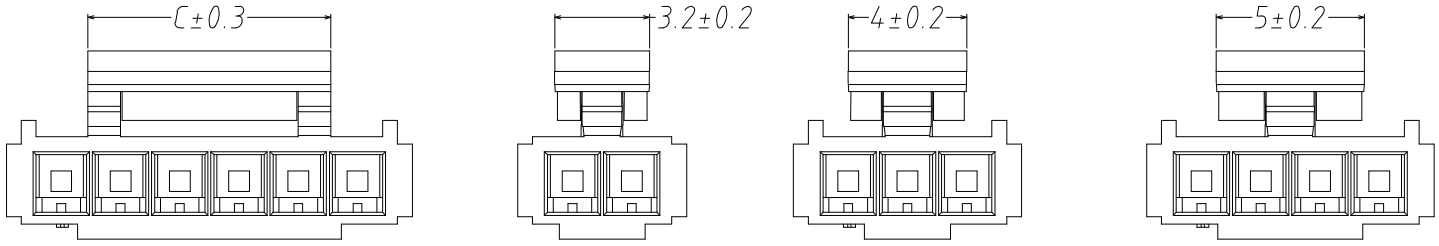

2P 3P 4P

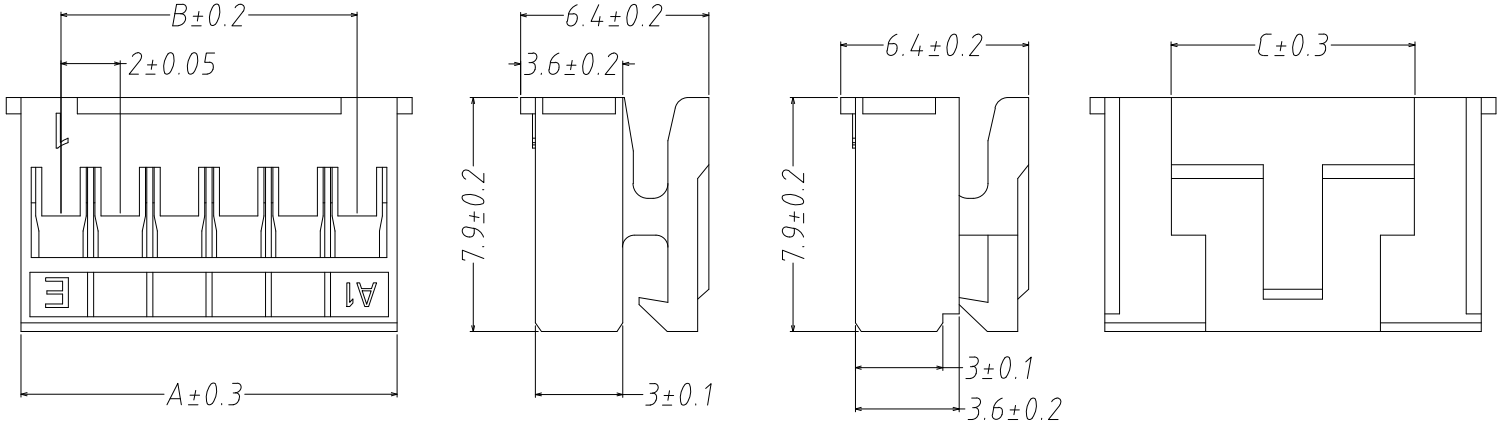

PIN	尺寸（mm）		
	A	B	C
HY-2Y	4.6	2.00	3.2
HY-3Y	6.6	4.00	4.0
HY-4Y	8.6	6.00	5.0
HY-5Y	10.6	8.00	6.2
HY-6Y	12.6	10.00	8.2
HY-7Y	14.6	12.00	10.2
HY-8Y	16.6	14.00	12.2
HY-9Y	18.6	16.00	14.2
HY-10Y	20.6	18.00	12.2
HY-11Y	22.6	20.00	14.2
HY-12Y	24.6	22.00	16.2
HY-13Y	26.6	24.00	16.2
HY-14Y	28.6	26.00	16.2
HY-15Y	30.6	28.00	16.2
HY-16Y	32.6	30.00	16.2
HY-17Y	34.6	32.00	16.2
HY-18Y	36.6	34.00	16.2

使用温度范围(Ambient temperature Range):-25° ~+85
适用线规(Applicable Wires):AWG 30#~22#
额定电压(Voltage rating):125V AC,DC
额定电流(Current rating):2A
接触电阻(Contact Resistance):≤0.01Ω
绝缘电阻(Insulation Resistance):≥1000MΩ
耐压(Withstand Voltange):1000VAC/min
材料 (Material)
1.胶壳:PA66 94V-0（2）

借用登记
旧底图总号
底图总号
签 字
日 期

GENERAL TOLERANCES			DRAWN BY	
0.X ±0.25	X.° ±3°		CHK. BY	
0.XX ±0.12			APRV. BY	
0.XXX ±0.05	X.X° ±0.5°			
UNIT	SIZE	SCALE	DRAWING NO.	
MM	A4	1:1		

浙江深海电子有限公司

SHEET	PROD. NAME	HY2.0-NY
1 OF 1	PART NO.	A20002-nY-B-01
TITLE		