HSF RoHS cULus CE

REVISION RECORD				
REV	ECN	DESCRIPTION	DRFT	DATE
A		NEW		22.2.16

NOTES1:

UL Standard

1. Rated voltage/current : 300V / 15A
2. Withstanding voltage : AC2500V/1Min.
3. Torque value : M2.5 , 3.5Lb.in
4. Wire range : 28~12AWG

IEC Standard

1.

Pollution degree	2
Overvoltage category	III
Rate impulse voltage(KV)	4KV
Rate voltage(V)	320V
Rate current(A)	18A

2. Torque value : M2.5 , 0.5N·m
3. Wire range : 0.2~2.5mm²

NOTES2:

1. Dimension shall be interpreted per ASME Y14.5-2009
2. Pitch : 5.0mm, Poles : N=02~24P
3. Stripping length : 7~8mm
4. Operating temperature: -40°C~+105°C
5. Undimensioned tolerances:

Pitch range in mm			Nominal dimension range in mm					— ⌒ ▱
TO 6	Over 6 TO 10	Over 10 TO 24	TO 30	Over 30 TO 60	Over 60 TO 100	Over 100 TO 150	Over 150	0.1/10
								∠
±0.15	±0.20	±0.30	±0.30	±0.50	±0.70	±1.00	±1.30	±2°

6. RoHS Compliance

Ordering Information

JL2EDGKA - 500 XX X XX

- Pitch: 500=5.0PH
- No.of pins: 02-24P
- Housing Color: B=Black, G=Green, U=Blue, R=Red, W=White, Y=Yellow, O=Orange, E=Grey
- Serial code: 01-99

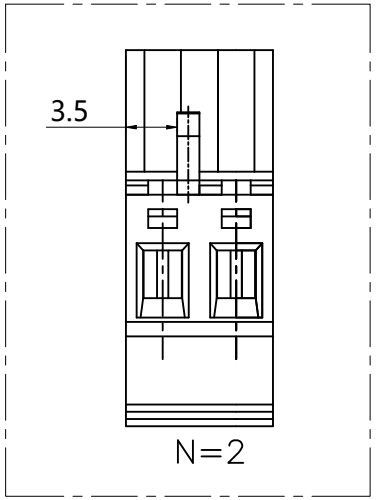

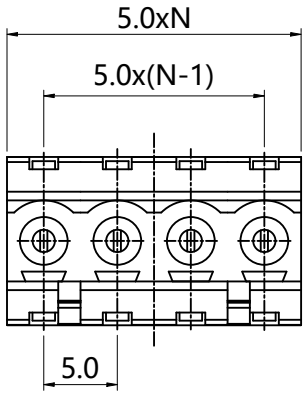

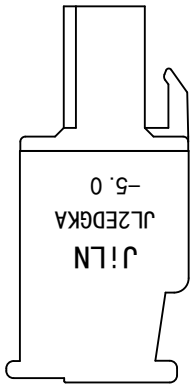

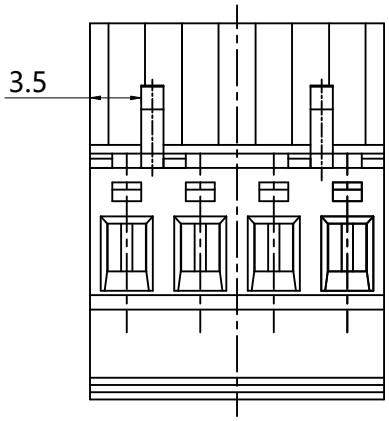

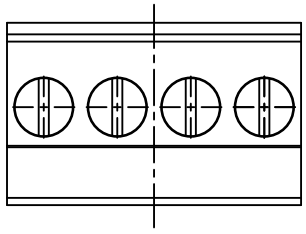

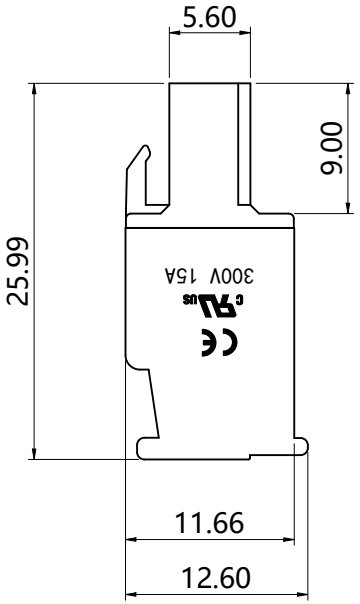

ITEM	NAME OF PART	MATERIAL	NOTES
4	Clamp	Copper alloy	Sn plated
3	Cage	Copper alloy	M2.5/Ni plated
2	Screw	Steel	M2.5/Zn plated
1	Housing	PA66	UL94V-0

DRAW	SHUANGPING ZHENG	SCALE	FIT
CHECK	LICHAO LIU	UNIT	mm
APPROVE	YONGLIANG GAO	SIZE	A4
		SHEET	1/1
		PROJ.	

JILN® 东莞市锦凌电子有限公司 DONGGUAN JINLING ELECTRONICS CO.,LTD

PART NO.	JL2EDGKA-500XXXXX
TITLE:	JL2EDGKA-5.0-XXP插拔式母座