HSF RoHS

REVISION RECORD				
REV	ECN	DESCRIPTION	DRFT	DATE
A0		NEW		21.12.16
A1		依实物修正字唛	ZZH	25.11.17

NOTES1:

UL Standard

1.Rated voltage/current : 300V / 15A

2.Withstanding voltage : AC2000V/1Min.

IEC Standard

1.

Pollution degree	2
Overvoltage category	Ⅲ
Rate impulse voltage(KV)	4KV
Rate voltage(V)	320V
Rate current(A)	20A

NOTES2:

1.Dimension shall be interpreted per ASME Y14.5-2009

2.Pitch : 5.0mm, Poles : N=02~24P

3.Operating temperature: -40°C~+105°C

4.Undimensioned tolerances:

Pitch range in mm			Nominal dimension range in mm					— ⌒ ▱
TO 6	Over 6 TO 10	Over 10 TO 24	TO 30	Over 30 TO 60	Over 60 TO 100	Over 100 TO 150	Over 150	0.1/10
								∠
±0.15	±0.20	±0.30	±0.30	±0.50	±0.70	±1.00	±1.30	±2°

5.RoHS Compliance

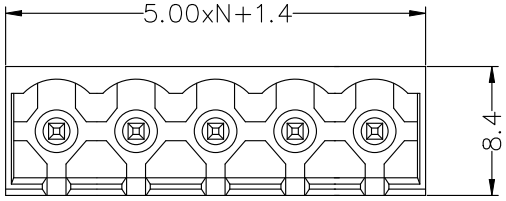

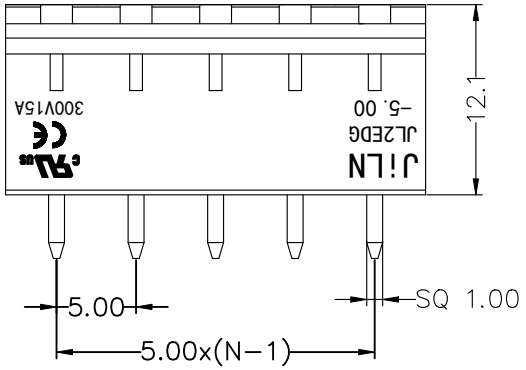

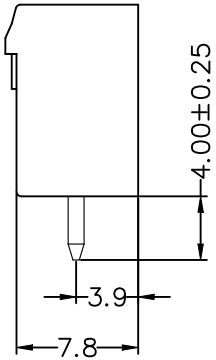

Ordering Information

JL2EDGVC - 500 XX X XX

- 500: Pitch, 500=5.0PH
- XX: No.of pins, 02-24P
- X: Housing Color, B=Black G=Green U=Blue R=Red W=White Y=Yellow O=Orange E=Grey
- XX: Serial code

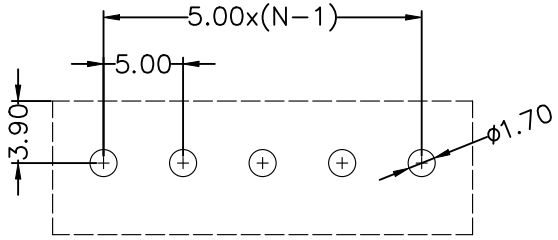

Recommended P.C.B Layout(Top Side)

DRAW	XH.LI	SCALE	FIT
		UNIT	mm
CHECK	W.CHEN	SIZE	A4
		SHEET	1/1
APPROVE	J.CHEN	PROJ.	

JILN® 东莞市锦凌电子有限公司 DONGGUAN JINLING ELECTRONICS CO.,LTD

PART NO.	JL2EDGVC-500XXXXX
TITLE:	JL2EDGVC-5.0-XXP插拔式公座/直脚