RoHS | GP | HF

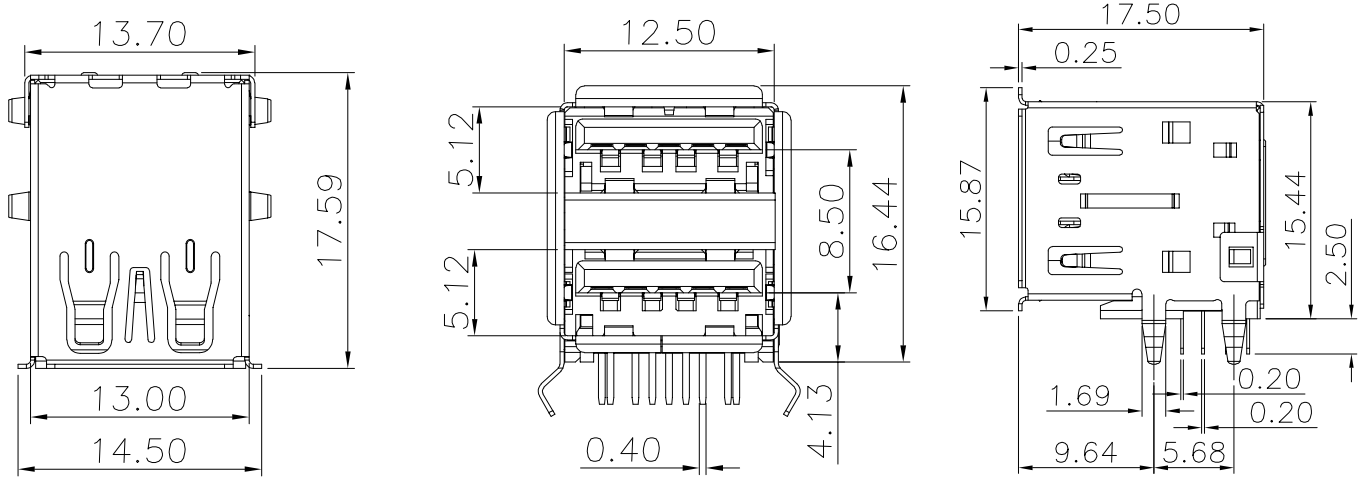

Pin #	SIGNAL NAME	DESCRIPTION	MATING SEQUENCE
1	VBUS	POWER	SECOND
2	D-	USB 2.0 DIFFERENTIAL PAIR	THIRD
3	D+		
4	GND	GROUND FOR POWER RETURN	SECOND
5	StdA_SSRX-	SUPERSPEED RECEIVER DIFFERENTIAL PAIR	LAST
6	StdA_SSRX+		
7	GND_DRAIN	GROUND FOR SIGNAL RETURN	
8	StdA_SSTX-	SUPERSPEED TRANSMITTER DIFFERENTIAL PAIR	
9	StdA_SSTX+		
Shell	Shield	CONNECTOR METAL SHELL	FRIST

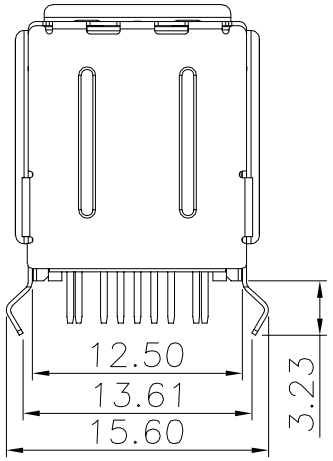

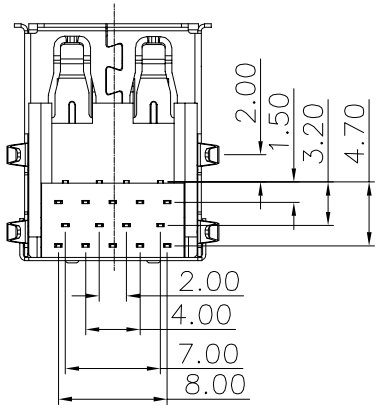

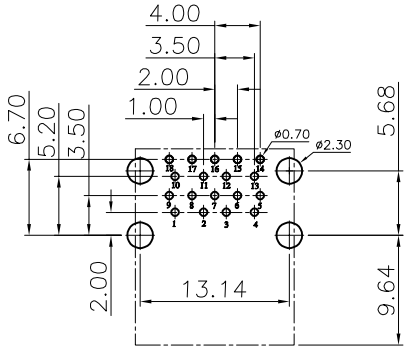

RECOMMENDED PCB LAYOUT(TOP VIEW)

T=1.60mm DEFAULT TOLERANCE ±0.05

NOTES:
1. MATERIAL:
   HOUSING: PBT,UL94V-0; COLOR: BLUE.
   CONTACT: COPPER ALLOY.T=0.20.
   SHELL: SUS201.T=0.25.
   MIDDLE SPRING: SUS201.
2. FINISH:
   CONTACT: GOLD PLATED ON CONTACT AREA,
   TIN PLATED ON SOLDER TAILS,
   NICKEL UNDERPLATING OVER ALL.
   SHELL: NICKEL PLATING OVER ALL.
3. SPECIFICATION:
   3.1: ELECTRICAL:
   CURRENT RATING: 1.8A For PIN1&PIN4;0.25A For Others.
   INSULATION RESISTANCE: 100MΩ Min.
   CONTACT RESISTANCE: 30mΩ Max.
   DIELECTRIC WITHSTANDING VOLTAGE: 100V/AC 1MINUTE.
   3.2: MECHANICAL:
   MATING FORCE: 3.57Kgf Max.
   UNMATING FORCE: 1.0Kgf Min.

更改记录	标记	变更内容	签名/日期

未注公差		单位	mm
X.X	±0.30	版本	A
X.XX	±0.20	比例	1:1
X.XXX	±0.10	投影	
Angle	±3.0°	页次	1/1

标准化	签名/日期
编制	周少华 21.09.25
审核	赵先礼 21.09.25
批准	田泽民 21.09.25

品名	双层USB3.0 A-TYPE 蓝胶G.F
图号	ZJLQ-2USB3.0-096H

浙江领强电子科技有限公司