FLSD04GHTLT

Contents

1. Overview 3
1.1 Product Description 3
1.2 Features Summary 3
2. Pin Assignment 4
3. Product List 5
4. Current Consumption 6
5. Operational Environment 6
6. Physical Dimension 7
7. Recommended Schematic 8

1. Overview

1.1 Product Description

SD NAND are highly integrated flash memories. Can be use in the device which can support SD2.0 standard. It is accessiblevia a dedicated serial interface optimized for fast and reliable data transmission. It has been developed to provide an inexpensive, mechanically robust storage medium in card form for multimedia consumer applications. SD NAND allows the design ofinexpensive players and drivers without moving parts. A low power consumption and a wide supply voltage range favors mobile, battery-powered application such as audio players, organizers, palmtops, electronic books, encyclopedia and dictionaries. Using very effective data compression schemes such as MPEG, the SD card will deliver enough capacity for all kinds of multimedia data.

1.2 Features Summary

-Capacity: 512MB

-Complies to SD Specification V2.0

-Voltage range for communication: 2.7~3.6V

-Variable clock rate 0-25 MHz (standard), 0-50 MHz (high performance)

-Up to 25 MB/sec data transfer rate (using four parallel data lines)

-password protection (CMD42-LOCK_UNLOCK)

-Sophisticated system for error recovery including a powerful ECC

-Global Wear Leveling

-Power management for low power operation

2. Pin Assignment

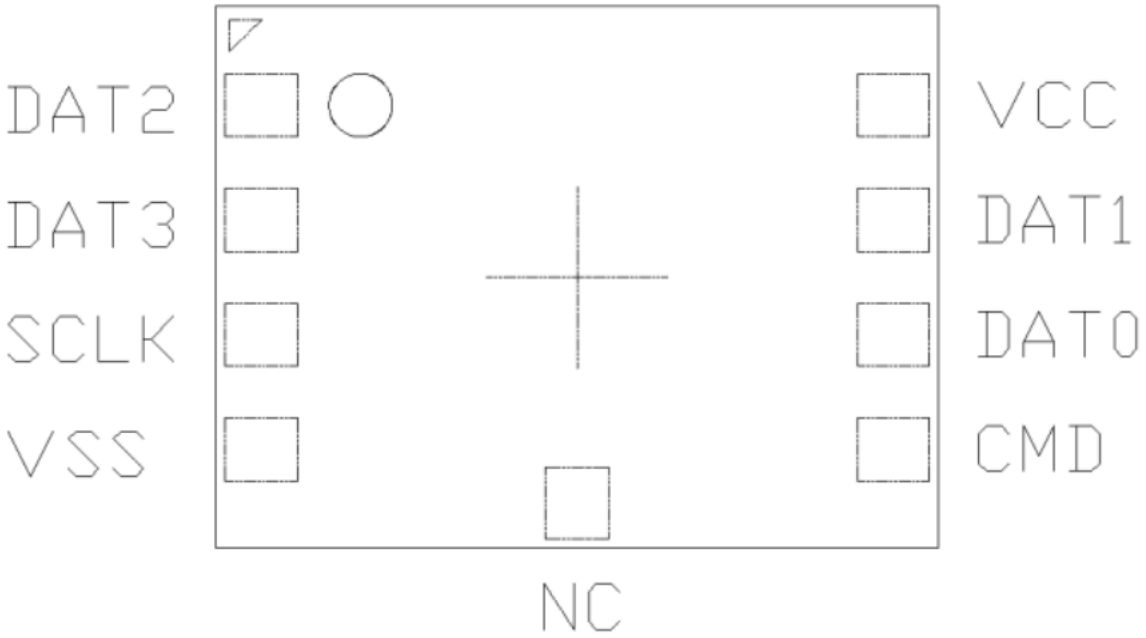

Figure 1:Top View

Pin No.	SD Mode		
	Name	Type	Description
1	SDD2	I/O/PP	Data Line [Bit 2]
2	SDD3	I/O/PP	Data Line [Bit 3]
3	SCLK	I	Clock
4	VSS	S	Supply voltage ground
5	CMD	PP	Command/Response
6	SDD0	I/O/PP	Data Line [Bit 0]
7	SDD1	I/O/PP	Data Line [Bit 1]
8	VCC	S	Supply voltage

Table 1: Pin Assignment

3. Product List

Part Number	Capacity	Actual Size	Sequential R/W	Package
FLSD04G	512MB	480MB	18/10 MB/s	6.00*8.00 (mm)

Table 2: Product List

4. Current Consumption

Standby current: 250uA（Maximum value）
Standby current: 120uA（average value）
Operating current: 35mA（Maximum value）
Operating current: 20mA（average value）

5. Operational Environment

Parameter	Range	
Temperature	Operating	-30℃~85℃
	Non-Operating	-65℃~150℃
Humidity	Operating	25% to 85%, non-condensing
	Non-Operating	25% to 85%, non-condensing

Table 3: Operational Environment

6. Physical Dimension

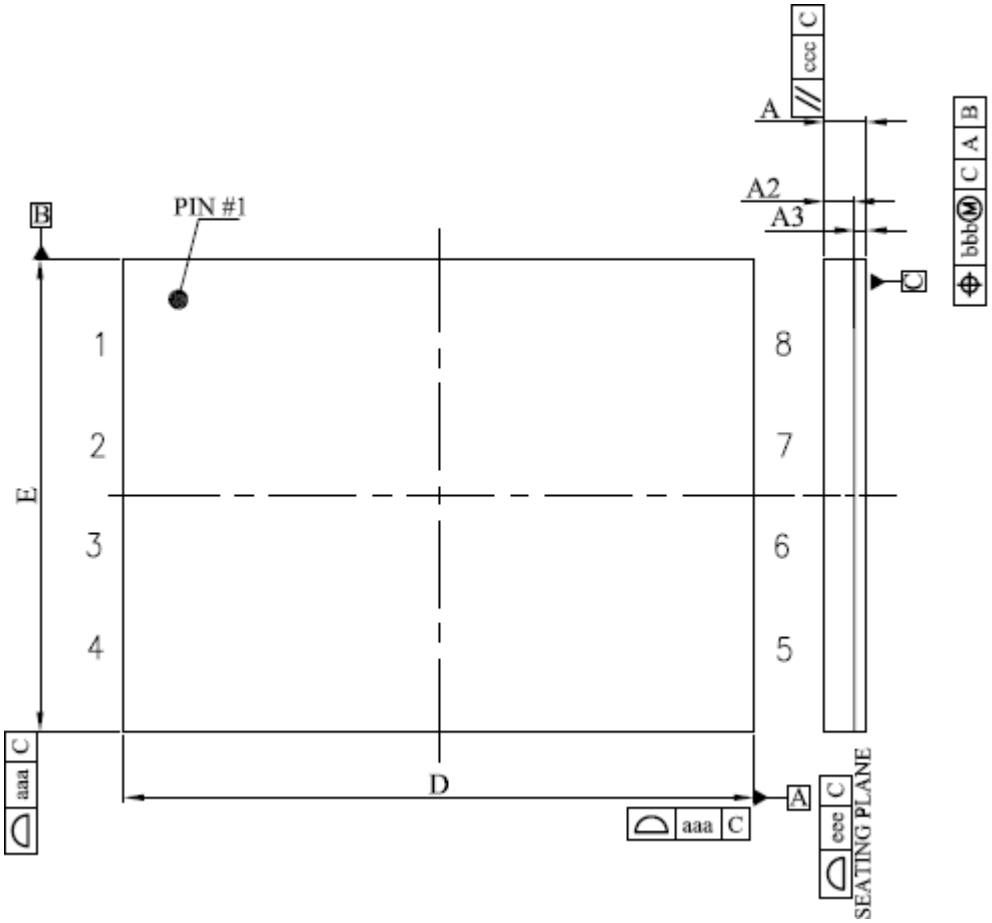

Figure 2:Top View and Side View

Item		Symbol	DIMENSION (mm)		
			MIN.	NOM.	MAX
Total height		A	0.75	0.80	0.85
Mold thickness		A2	0.60	0.62	0.63
SBT thickness		A3	0.15	0.18	0.22
Lead width		b	0.80	0.85	0.90
Lead width		b1	0.35	0.40	0.45
Package size	X	D	7.90	8.00	8.10
	Y	E	5.90	6.00	6.10
Lead pitch		e	1.27BSC		
Package profile of a surface		aaa	0.25		
Lead position		bbb	0.10		
Paralleliam		ccc	0.10		
Package profile of a surface		eee	0.08		

Table 4: SD NAND Package: Dimension

7. Recommended Schematic

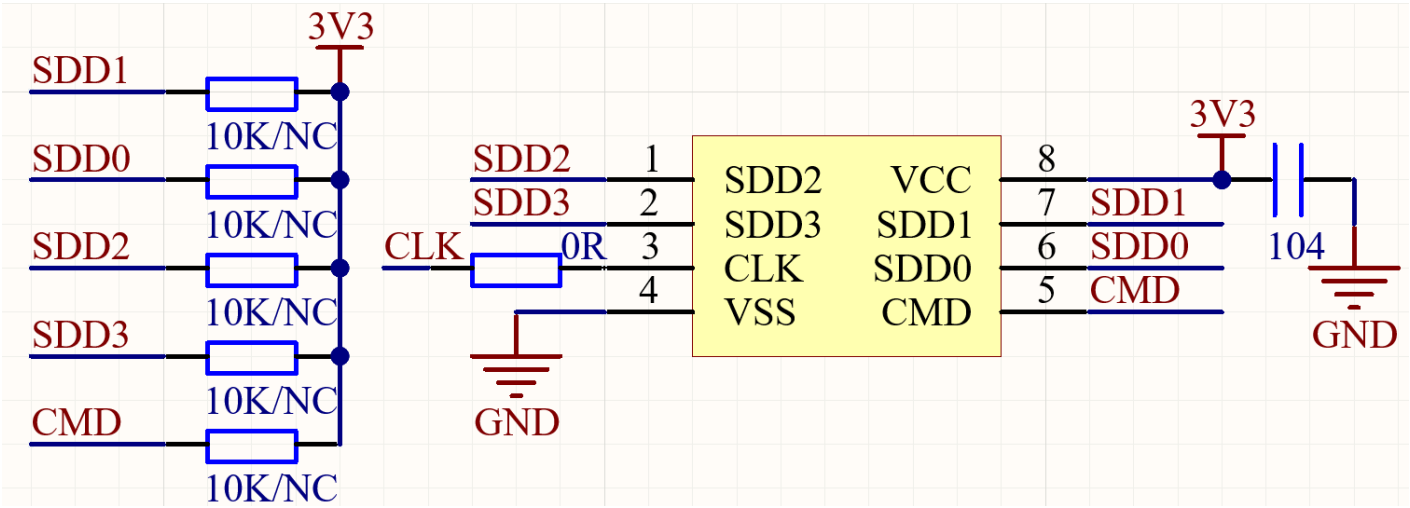

Figure 4: Recommended Schematic

Notice:

1. SCLK should be reserved a position for a 0 ohm resistor.
2. Capacitor C1 should be connected with VCC as closely as possible.
3. We recommend that SDD0, SDD1, SDD2, SDD3, SCLK, CMD should be surrounded by GND. If not, please make sure the distance between lines is 2 times wider than the line width.
4. The pads in the middle are fixed, please connect GND