ROHS

REV.	ECN NO.	DESCRIPTION	DRAW	DATE

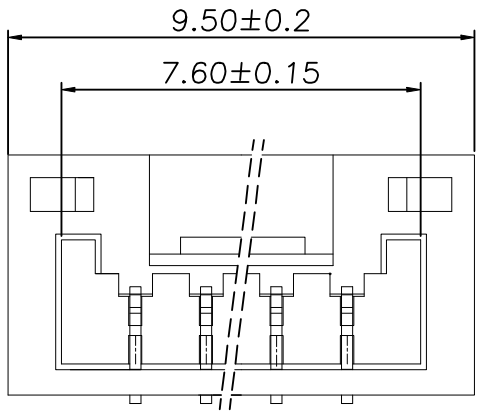

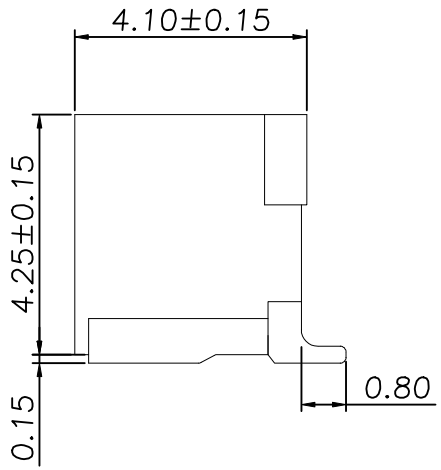

SPECIFICATIONS:

1.Current Rating: 1A AC, DC
2.Voltage Rating: 50V AC, DC
3.Temperatuer Range: −40°C~+105°C
4.Contact Resistance: 30mΩ Max
5.Insulation Resistance: 100MΩ Min
6.WithstandingVoltang: 500V AC/minute
7、Material: Wafer LCP UL94−V0
PIN Brass Tin−plated

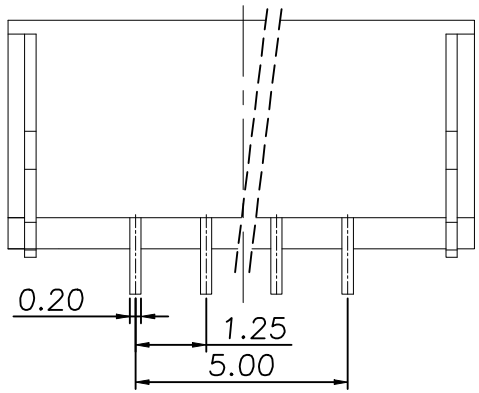

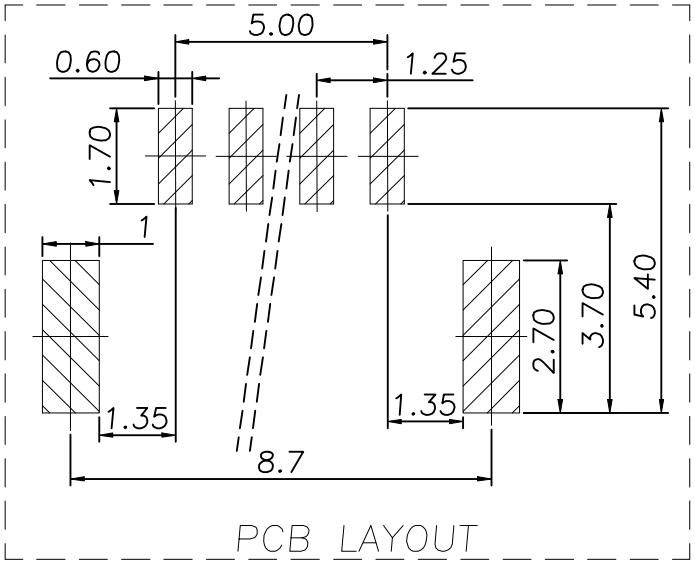

Contact	Phosphor Bronze	Tin Plating
Solder Lug	Brass	Tin Plating
Base	LCP	UL−94V0
Part Name	Material	Plating

COSTOMER DRAWING		LAILAN 深圳市莱联电子有限公司 SHENZHEN LAILIAN ELECTRONICS CO.,LTD	
DRAWING			
CHECK			
APPROVAL			
TOLERANCES ARE			
30-150	±0.35	ANGLE	
10-30	±0.2		
5-10	±0.15	±3°	
0-5	±0.1		
TITLE	针座 PIN距1.25 5PIN 卧贴（GH系列）	REV.	A
PART NO.	LAIL-PHC1.25-5P-01-GH-WT	UNITS	mm
DWG. NO.		Projection	