ROHS

REV.	ECN NO.	DESCRIPTION	DRAW	DATE

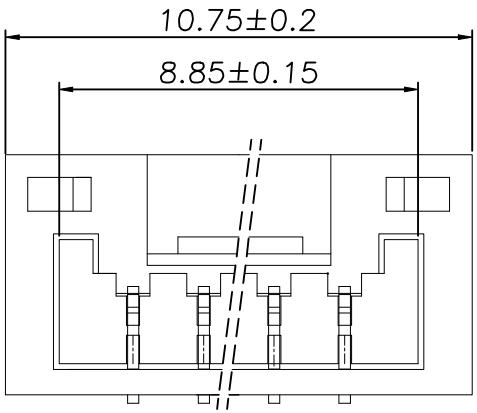

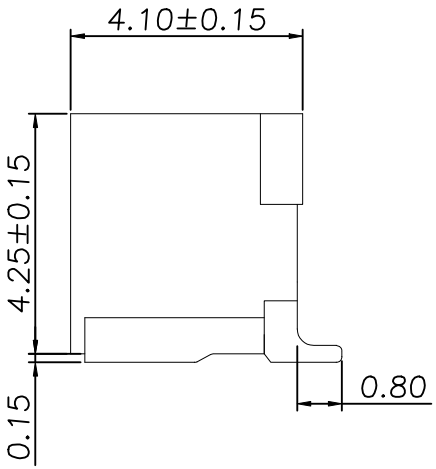

SPECIFICATIONS:

1.Current Rating: 1A AC, DC
2.Voltage Rating: 50V AC, DC
3.Temperatuer Range: −40°C~+105°C
4.Contact Resistance: 30mΩ Max
5.Insulation Resistance: 100MΩ Min
6.WithstandingVoltang: 500V AC/minute
7、Material: Wafer LCP UL94−V0
PIN Brass Tin−plated

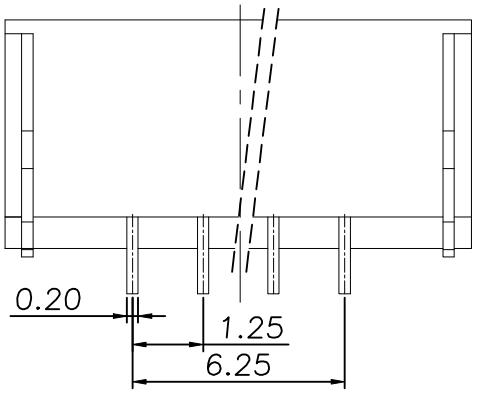

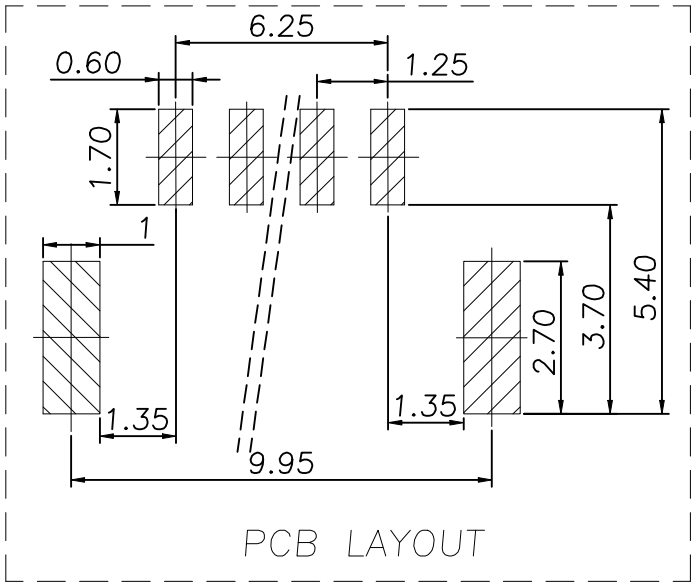

Contact	Phosphor Bronze	Tin Plating
Solder Lug	Brass	Tin Plating
Base	LCP	UL−94V0
Part Name	Material	Plating

COSTOMER DRAWING	LAILAN 深圳市莱联电子有限公司 SHENZHEN LAILIAN ELECTRONICS CO.,LTD		
DRAWING			
CHECK			
APPROVAL			
TOLERANCES ARE	TITLE	针座 PIN距1.25 6PIN 卧贴（GH系列）	REV. A
30-150 ±0.35 / 10-30 ±0.2 / 5-10 ±0.15 / 0-5 ±0.1 / ANGLE ±3°	PART NO.	LAIL-PHC1.25-6P-01-GH-WT	UNITS mm
	DWG. NO.		Projection