ROHS

REV.	ECN NO.	DESCRIPTION	DRAW	DATE

SPECIFICATIONS:

1.Current Rating: 3A AC, DC
2.Voltage Rating: 250V AC, DC
3.Temperatuer Range: −40°C~+105°C
4.Contact Resistance: 20mΩMax
5.Insulation Resistance: 1000MΩMin
6.WithstandingVoltang: 1000V AC/minute
7.Material : Nylon66 UL94V−0
Pin Material : Brass / Tin−Plated.

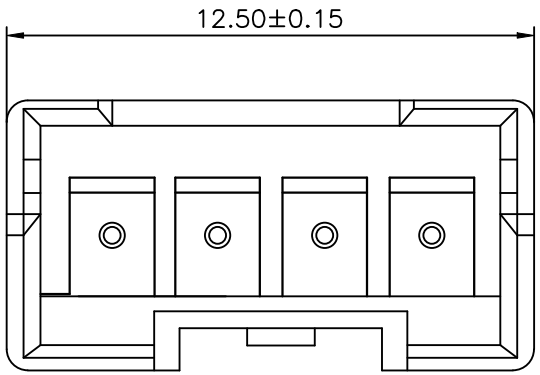

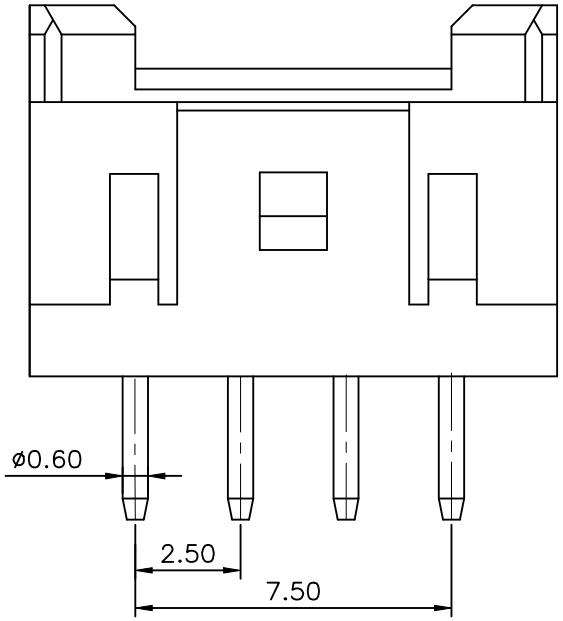

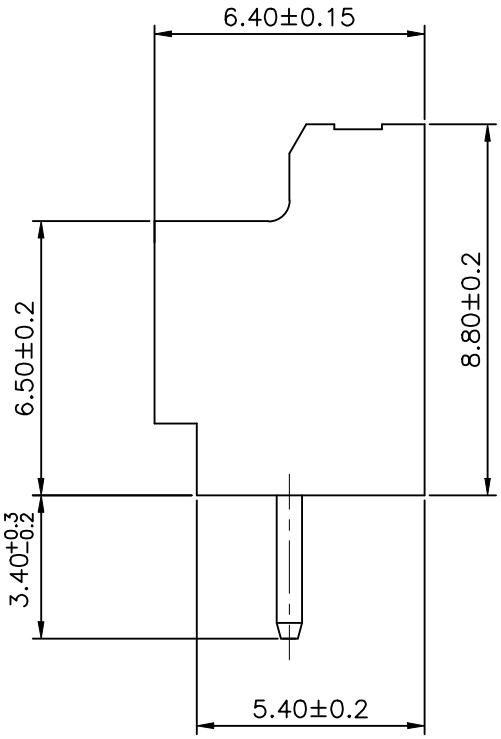

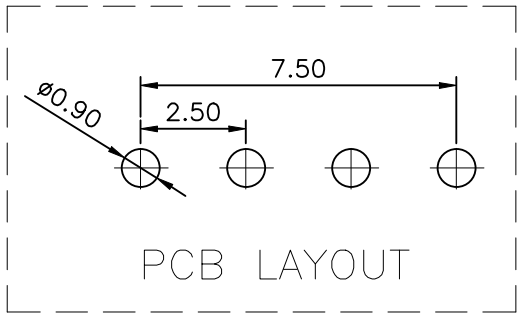

COSTOMER DRAWING			深圳市莱联电子有限公司 SHENZHEN LAILIAN ELECTRONICS CO.,LTD		
DRAWING			TITLE	针座 PIN距2.5 4PIN直插（XA系列）	REV. A
CHECK			PART NO.	LAIL-PHC2.5-4P-01-XA-L	UNITS mm
APPROVAL			DWG. NO.		Projection
TOLERANCES ARE					
30-150	±0.35	ANGLE			
10-30	±0.2				
5-10	±0.15	±3°			
0-5	±0.1				