ROHS

REV.	ECN NO.	DESCRIPTION	DRAW	DATE

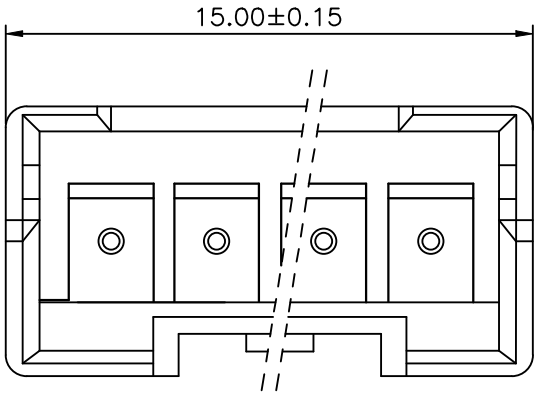

SPECIFICATIONS:

1.Current Rating: 3A AC, DC
2.Voltage Rating: 250V AC, DC
3.Temperatuer Range: −40°C~+105°C
4.Contact Resistance: 20mΩMax
5.Insulation Resistance: 1000MΩMin
6.WithstandingVoltang: 1000V AC/minute
7.Material : Nylon66 UL94V−0
Pin Material : Brass / Tin−Plated.

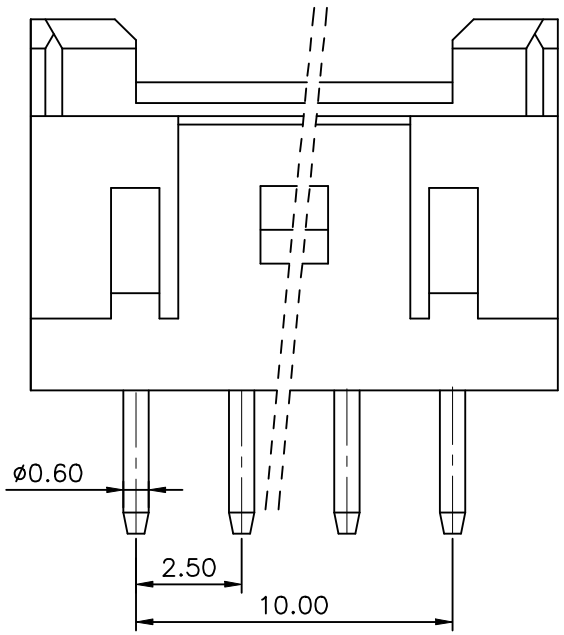

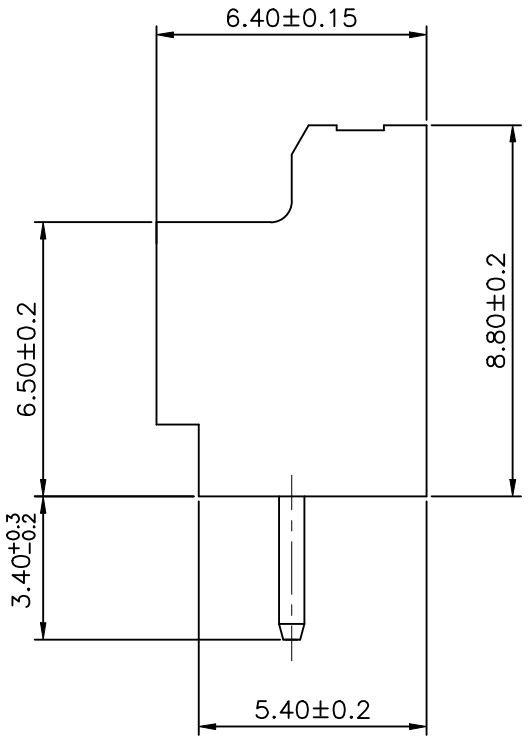

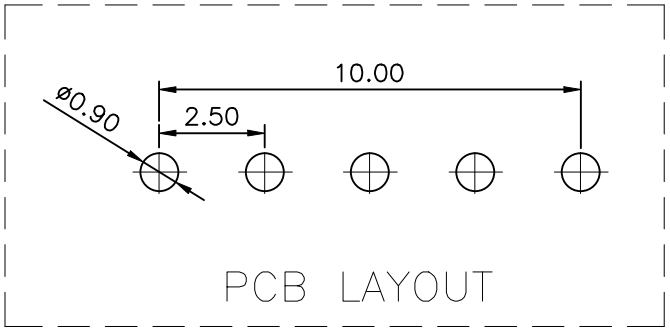

COSTOMER DRAWING			
DRAWING			
CHECK			
APPROVAL			
TOLERANCES ARE			
30-150	±0.35	ANGLE	
10-30	±0.2		
5-10	±0.15	±3°	
0-5	±0.1		

LAILAN 深圳市莱联电子有限公司
SHENZHEN LAILIAN ELECTRONICS CO.,LTD

TITLE	针座 PIN距2.5 5PIN直插（XA系列）	REV.	A
PART NO.	LAIL-PHC2.5-5P-01-XA-L	UNITS	mm
DWG. NO.		Projection	