This document is the property of Xinshengyue Corporation and is delivered on the express condition that it is not to be disclosed, reproduced or used, in whole or in part, for manufacture or sale by anyone other than Xinshengyue Corporation without its prior concert&that no right is granted to disclose or to use any information in this document.

REV.	ECN NO.	DESCRIPTION	DATE	DESIGN
A	ECN NO.	NEW DRAWING	2026.05.06	Janus

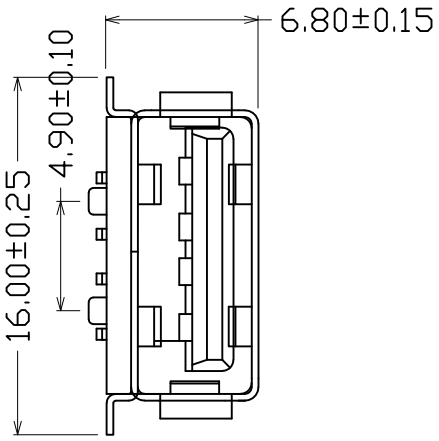

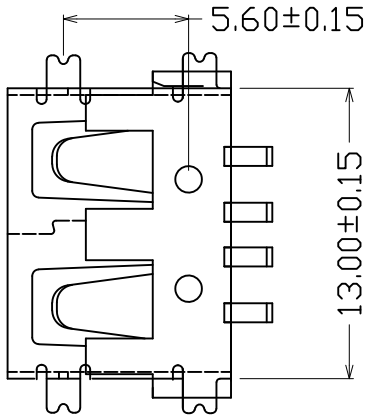

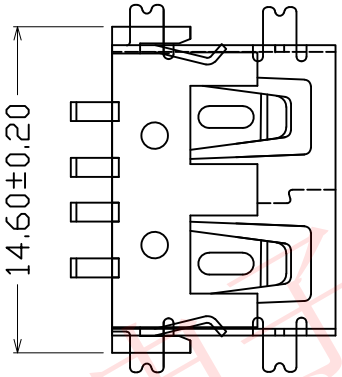

NOTES:
1. MATERIAL SPECIFCATION
1.1 INSULATION MATERIAL THERMOPLASTIC UL94V-0 LCP Black ROHS.
1.2 SHELL:SPCC,T:0.30mm PLATING: NICKEL 50U"
1.3 TERMINAL:C2680 T:0.25mm PLATING: GOLD G/F /TIN PLATED 50U".
2. ELECTRICAL CHARACTERISTIC:
2.1 INSULATION RESISTANCE:1000MΩ MIN.
2.2 CONTACT RESISTANCE:30mΩ MAX.
2.3 WITHSTANDING VOLTAGE:500V AC.
3. MECHANICAL CHARACTERISTICS:
3.1 INSERTION FORCE:35N MAX.
3.2 EXTRACTION FORCE:10N MIN.

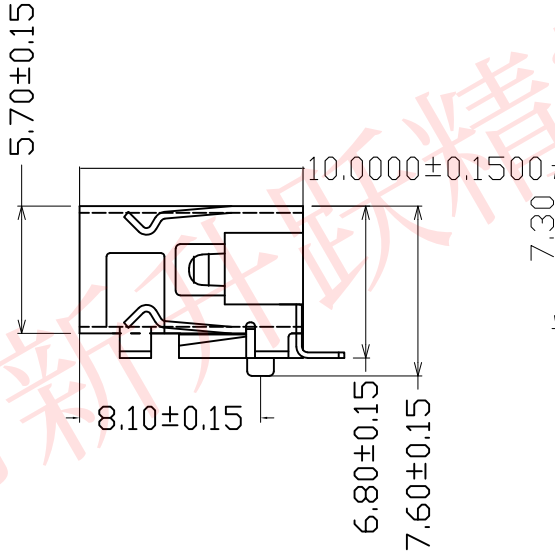

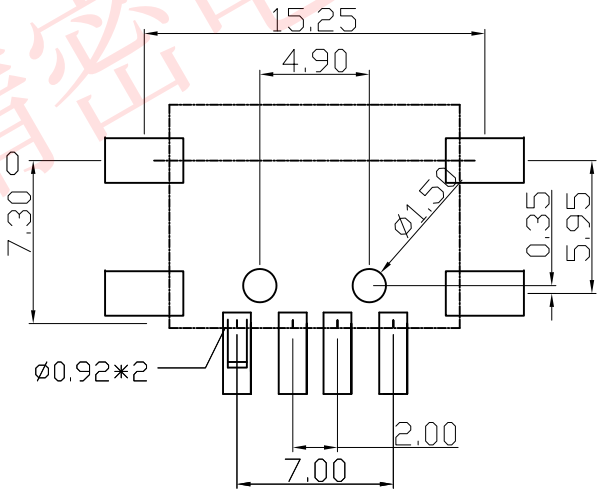

P/N: 103047-210101
2:SMT
SERIES NUMBER:01~99
01:FE SHELL,BALCK
CONTACT AREA PLATED
1: Au G/F
PACKAGING:1.REEL
SOLDER AREA PLATED
0: SN

TOLERANCE		NAME(INTENDED USE) CUSTOMER DRAWING	XSUA® 深圳市新升跃精密电子有限公司 SHENZHEN XINSHENGYUE PRECISION ELECTRONICS CO., LTD
X.X ±0.38	X.° ±10°	PART NO.	TITLE: USB AF短体10.00mm铁壳平口 全贴四脚 H=6.80mm
.XX ±0.25	.X° ± 8°		
.XXX ±0.02	.XX° ± 5°	DESIGN: Arvin	DRAWG NO. C-103047
UNITS	mm		SCALE 1:1 / SHEET 1/2 / REV. A
MATERILA		CHED:	
FINISH		APPD:	

深圳市新升跃精密电子有限公司

This document is the property of Xinshengyue Corporation and is delivered on the express condition that it is not to be disclosed, reproduced or used, in whole or in part, for manufacture or sale by anyone other than Xinshengyue Corporation without its prior concert&that no right is granted to disclose or to use any information in this document.

REV.	ECN NO.	DESCRIPTION	DATE	DESIGN
A	ECN NO.	NEW DRAWING	2026.05.06	Janus

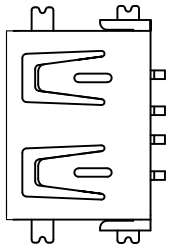

产品图

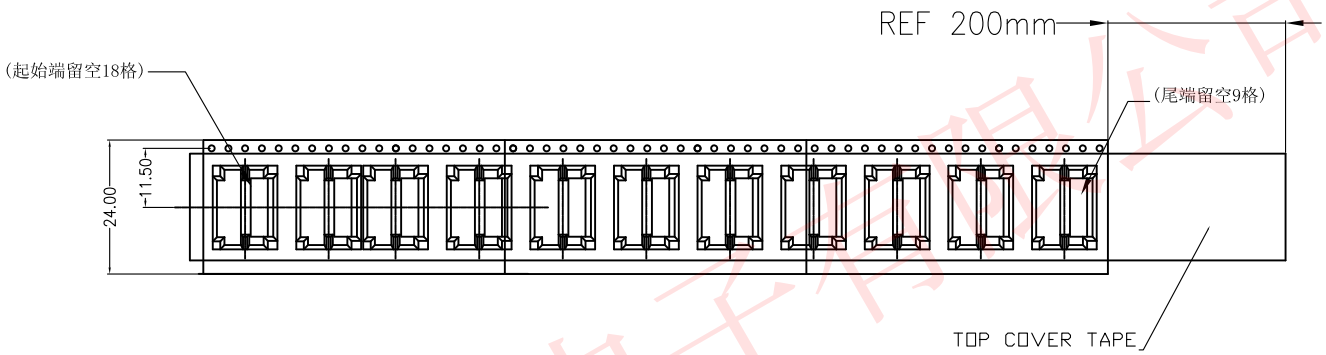

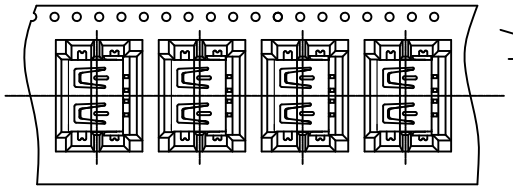

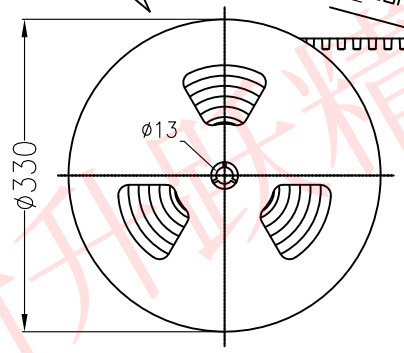

500PCS/REEL

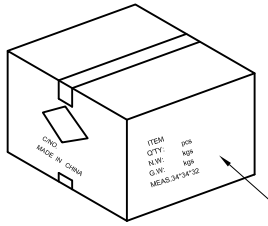

BOX
DIMENSIONS:
340*340*320

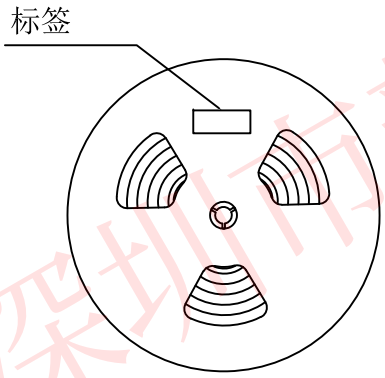

每盘如圖示位置需貼"轉盤標籤"

500	11	5500pcs
PCS/ REEL	REELS/ BOX	QUANTITY

TOLERANCE		NAME(INTENDED USE) CUSTOMER DRAWING	XSUA® 深圳市新升跃精密电子有限公司 SHENZHEN XINSHENGYUE PRECISION ELECTRONICS CO., LTD
X.X ±0.38	X.° ±10°	PART NO.	TITLE: USB AF短体10.00mm铁壳平口 全贴四脚 H=6.80mm
.XX ±0.25	.X° ± 8°		
.XXX ±0.02	.XX° ± 5°	DESIGN: Arvin	DRAWG NO. C-103047
UNITS	mm		SCALE 1:1 / SHEET 2/2 / REV. A
MATERILA		CHED:	
FINISH		APPD:	

深圳市新升跃精密电子有限公司