This document is the property of Xinshengyue Corporation and is delivered on the express condition that it is not to be disclosed, reproduced or used, in whole or in part, for manufacture or sale by anyone other than Xinshengyue Corporation without its prior concert&that no right is granted to disclose or to use any information in this document.

REV.	ECN NO.	DESCRIPTION	DATE	DESIGN
A	ECN NO.	NEW DRAWING	2026.05.05	Janus

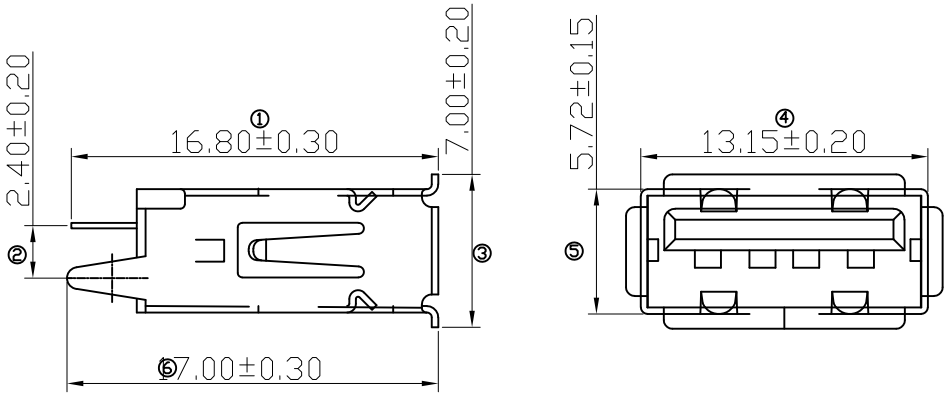

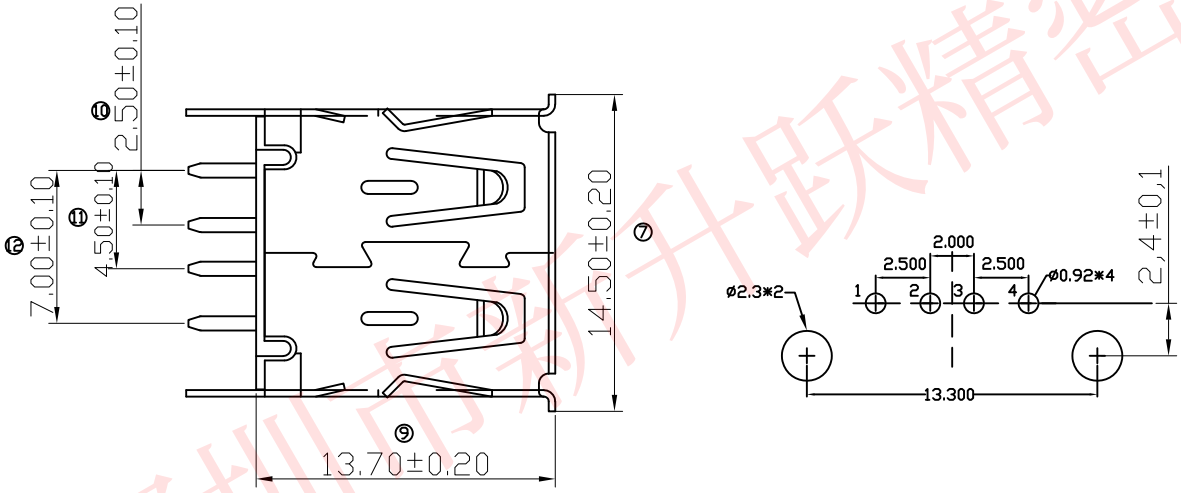

SPECIFICATIONS

1)Electrical:
- 1.1 Contact Resistance: 30 mΩ Max
- 1.2 Insulation Resistance: 1000MΩ Min
- 1.3 Withstanding Voltage: 500V DC
- 1.4 Current rating 1.5AMP Max.
- 1.5 Total Mating Force: 35N Max.
- 1.6 Total Unmating force: 7N Min.
- 1.7temperature Rage: −25℃~+75℃

2)Material:
- 2.1 Housing: High temperature Plastics UL94V−0 PBT Black ROHS
- 2.2 SHELL: SPCC
- 2.3 Contact: C2680

3)Finishing:
- 3.1 plating:Au or Sn Over 50u" Ni
- 3.2 Crimp Terminal :Gold−plating
- 3.2 Shell: Nickel−plating

P/N: 103046-120101
- 1:DIP
- PACKAGING:2.TRAY
- SERIES NUMBER:01~99
- CONTACT AREA PLATED 1: Au G/F
- SOLDER AREA PLATED 0: SN

TOLERANCE		NAME(INTENDED USE) CUSTOMER DRAWING	XSUA® 深圳市新升跃精密电子有限公司 SHENZHEN XINSHENGYUE PRECISION ELECTRONICS CO., LTD
X.X ±0.38	X.° ±10°	PART NO.	TITLE: USB AF180度立式卷边直脚 L=13.70mm
.XX ±0.25	.X° ± 8°		
.XXX ±0.02	.XX° ± 5°	DESIGN: Arvin	DRAWG NO. C−103046
UNITS	mm		SCALE 1:1 / SHEET 1/1 / REV. A
MATERILA		CHED:	
FINISH		APPD:	

深圳市新升跃精密电子有限公司