This document is the property of Xinshengyue Corporation and is delivered on the express condition that it is not to be disclosed, reproduced or used, in whole or in part, for manufacture or sale by anyone other than Xinshengyue Corporation without its prior concert&that no right is granted to disclose or to use any information in this document.

REV.	ECN NO.	DESCRIPTION	DATE	DESIGN
A	ECN NO.	NEW DRAWING	2026.04.28	Janus

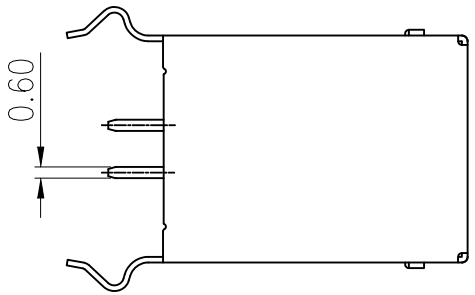

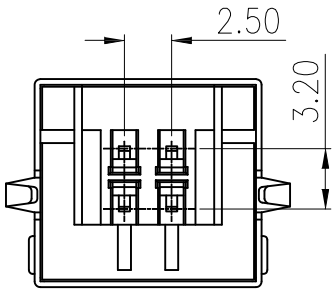

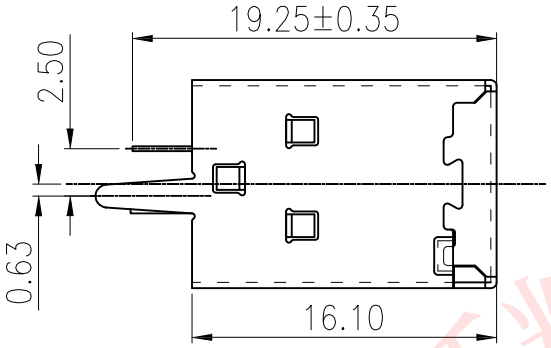

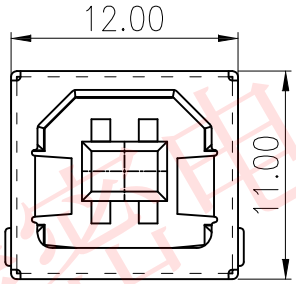

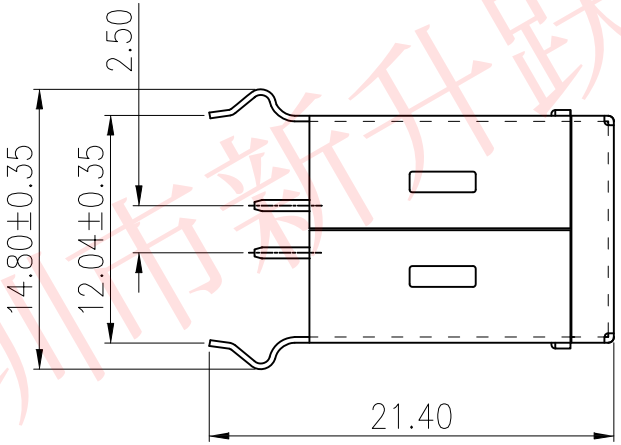

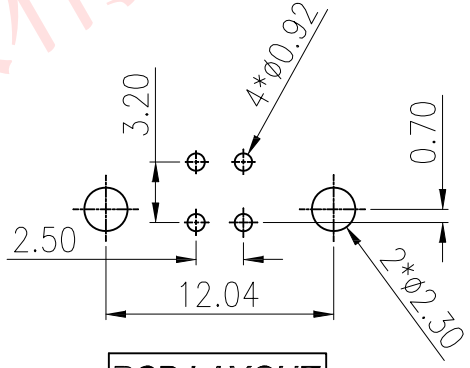

PCB.LAYOUT

NOTES:
1.MATERIAL:
1.1 Housing:PBT ,UL94-HB
1.2 terminals:Copper Alloy
Gold plated in contact area:
Tin 40u"min plated in termination
Nickel Plated overall
1.3 Shell:SPCC t=0.30mm,
Nickel 40u"min Plated overall
2.ELECTRICAL CHARACTERISTICS:
2.1 Rating Current :1.5 Ampere
2.2 Rating Voltage :30 V Max
2.3 Contact Resistance:30 Milli ohms
2.4 Insulation Resistance:1000 Mega ohms Min.
3.MECHANICAL CHARACTERISTICS:
3.1 Connector Mating force: 35N MAX(3.57Kgf)
3.2 Connector Unmating force:10N min(1.02Kgf)
3.3 Durability:1500Cycles.
4.ENVIRONMENT CHARACTERISTICS:
4.1 Operating temperature:-0℃ to +50℃
4.2 Storage temperature:-20℃ to +60℃

100PCS一盘，1000PCS一捆，4000PCS一箱

P/N: 103038-120101
1:DIP
SERIES NUMBER:01~99
CONTACT AREA PLATED
1: Au G/F
8: Au 30U"
PACKAGING:2.TRAY
SOLDER AREA PLATED
0: SN

TOLERANCE		NAME(INTENDED USE) CUSTOMER DRAWING	XSUA® 深圳市新升跃精密电子有限公司 SHENZHEN XINSHENGYUE PRECISION ELECTRONICS CO., LTD
X.X ±0.38	X.° ±10°	PART NO.	TITLE: USB BF 180度
.XX ±0.25	.X° ± 8°		
.XXX ±0.02	.XX° ± 5°	DESIGN: Arvin	DRAWG NO. C-103038
UNITS	mm	CHED:	SCALE 1:1 / SHEET 1/1 / REV. A
MATERILA		APPD:	
FINISH			

深圳市新升跃精密电子有限公司