This document is the property of Xinshengyue Corporation and is delivered on the express condition that it is not to be disclosed, reproduced or used, in whole or in part, for manufacture or sale by anyone other than Xinshengyue Corporation without its prior concert&that no right is granted to disclose or to use any information in this document.

REV.	ECN NO.	DESCRIPTION	DATE	DESIGN
A	ECN NO.	NEW DRAWING	2026.04.25	Janus

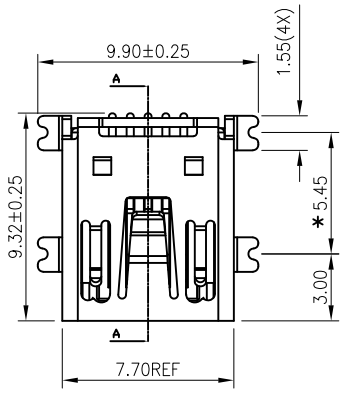

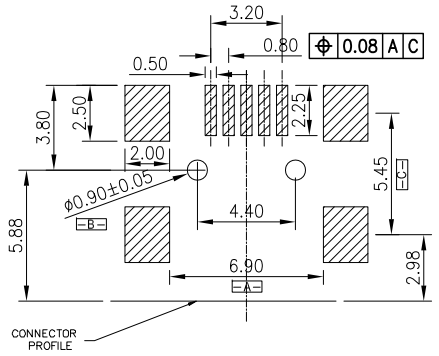

Recommend PCB layout

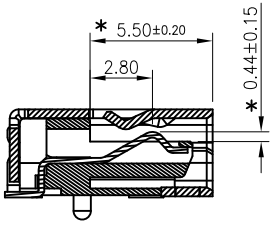

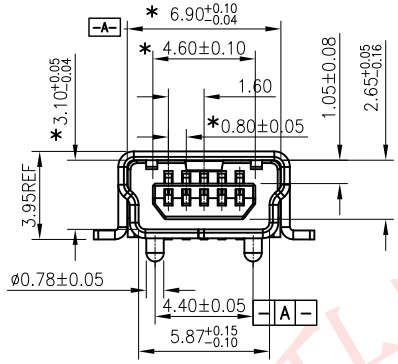

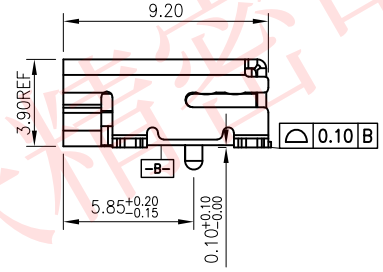

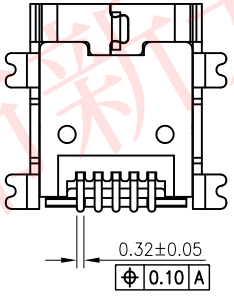

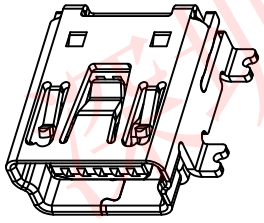

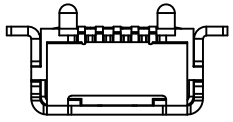

规格说明:Specifications:

1. 电气特性:Electrical:
   - 1.1. 额定值: Current Rating:, DC5V, 1A/contact terminal
   - 1.2. 接触阻抗:Contact Resistance:
     Initial:50 milliohms MAX, After test:50 milliohms.
   - 1.3. 耐电压:Dielectnic Withstanding Voltage:
     100 V AC AT Sea Levol, 1 Minutes
   - 1.4. 绝缘阻抗:Insulation Resistance:
     100MEGA ohms MIN
2. 物理环境性能:Mechanical & Environment:
   - 2.1. 插拔力: Connector Mate and Unmate Force
     Mate force:Initial:35N Max
     Unmate force:Initial:7N MIN.
   - 2.3. 产品耐回流焊温度:Reflow 265度, 60S,
   - 2.4. 盐雾测试:Salt Spray:48H MIN(Gold and Nickel), 12H MIN(Tin)
3. 原材料和电镀:Material and Plating:
   - 3.1. 塑胶:Housing&Cover&Sheath:
     High Temperature Thermaplastics,
     Ul 94V-0 LCP E130I Black RoHS
   - 3.2. 端子:C5191, T=0.25mm,
     Plating Gold 1U″ in Mating Area;Matte Tin 80U″ MIN
     On Solder Tails, Nickel 50U″ underplating over all.
   - 3.3. 外壳:C5191, T=0.40mm, Nickel Plating
     50U″ MIN, Salt spray:48H,
4. * 重点尺寸管控, 标(XX)为FAI检验尺寸.

P/N: 103035-210101

- 2:SMT
- PACKAGING:1.REEL
- SERIES NUMBER:01~99
- CONTACT AREA PLATED
  - 1: Au G/F
  - 8: Au 30U”
- SOLDER AREA PLATED
  - 0: SN

B型

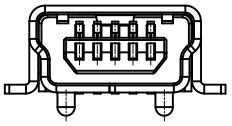

TOLERANCE		NAME(INTENDED USE) CUSTOMER DRAWING	XSUA® 深圳市新升跃精密电子有限公司 SHENZHEN XINSHENGYUE PRECISION ELECTRONICS CO., LTD
X.X ±0.38	X.° ±10°	PART NO.	TITLE: MINI USB 5PIN FEMALE (B型)
.XX ±0.25	.X° ± 8°		
.XXX ±0.02	.XX° ± 5°	DESIGN: Arvin	DRAWG NO. C-103035
UNITS	mm		SCALE 1:1 / SHEET 1/2 / REV. A
MATERILA		CHED:	
FINISH		APPD:	

深圳市新升跃精密电子有限公司

This document is the property of Xinshengyue Corporation and is delivered on the express condition that it is not to be disclosed, reproduced or used, in whole or in part, for manufacture or sale by anyone other than Xinshengyue Corporation without its prior concert&that no right is granted to disclose or to use any information in this document.

REV.	ECN NO.	DESCRIPTION	DATE	DESIGN
A	ECN NO.	NEW DRAWING	2026.04.25	Janus

TAKING OUT DIRECTION

拉出时，前空25PCS，后空10PCS
整卷合计785格

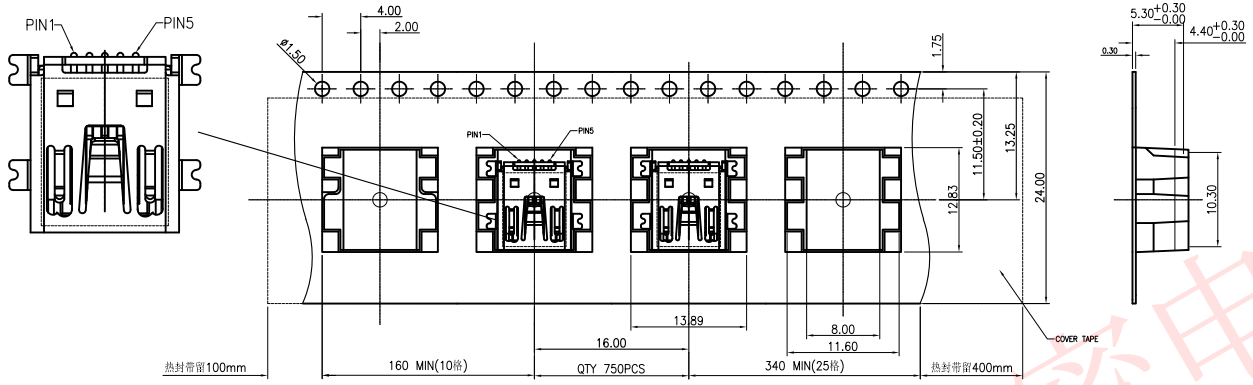

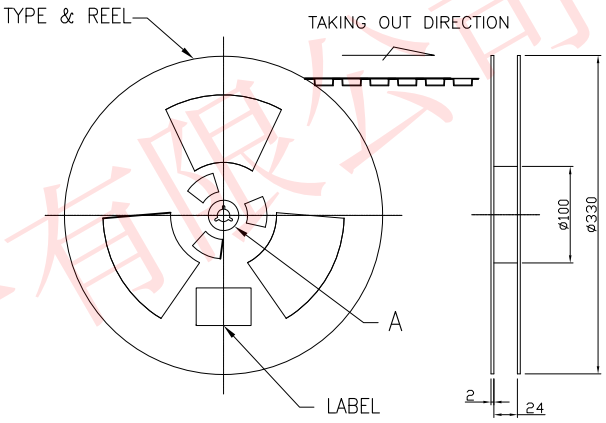

产品用防水袋、护角板装，防水袋里面装5包干燥剂，后用胶纸将防水袋口封住。

上袋热封.

纸箱规格：FCI印刷，双坑 K=K，外径：350*350*350

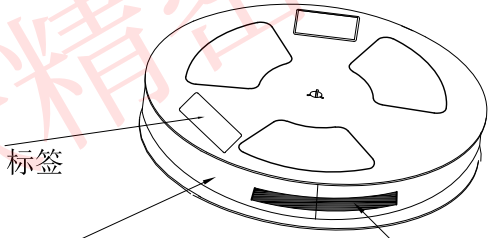

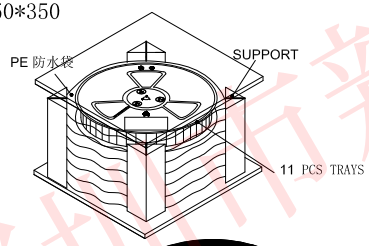

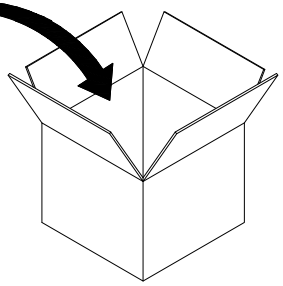

Label

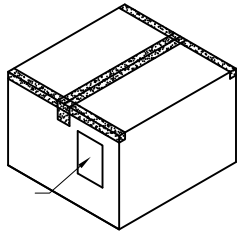

NOTES:

1.MATERAIL:
- REEL: POLYSTYRENE (PS) BLUE
- CARRIER: POLYSTYRENE (PS)
- COVER TYPE: POLYESTER (PET)

2.QUANTITY TO BE PACKAGED:
- 750 PCS/REEL
- 11 REEL/CARTON
- 8250pcs/CARTON

3.COVER TAPE PEEL STRENGTH:0.1~1N.
PEEL SPEED:300mm/MINUTE

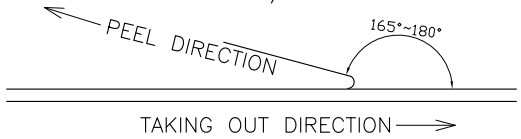

4.STORAGE CONDITION:
−20° TO 50°/20 TO 85%RH.

TOLERANCE		NAME(INTENDED USE) CUSTOMER DRAWING	XSUA® 深圳市新升跃精密电子有限公司 SHENZHEN XINSHENGYUE PRECISION ELECTRONICS CO., LTD
X.X ±0.38	X.° ±10°	PART NO.	TITLE: MINI USB 5PIN FEMALE (B型)
.XX ±0.25	.X° ± 8°		
.XXX ±0.02	.XX° ± 5°	DESIGN: Arvin	DRAWG NO. C−103035
UNITS	mm		SCALE 1:1 / SHEET 2/2 / REV. A
MATERILA		CHED:	
FINISH		APPD:	

深圳市新升跃精密电子有限公司