RoHS Compliant

REV.	ECN NO	LTR	DESCRIPTION	REVISER	DATE
A			Initial release.	LIU	2020.10.10

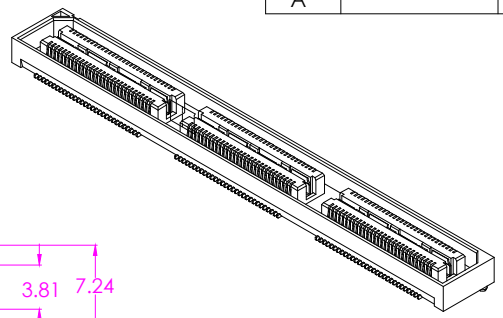

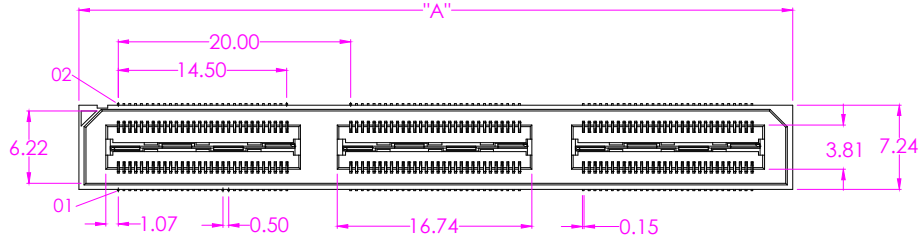

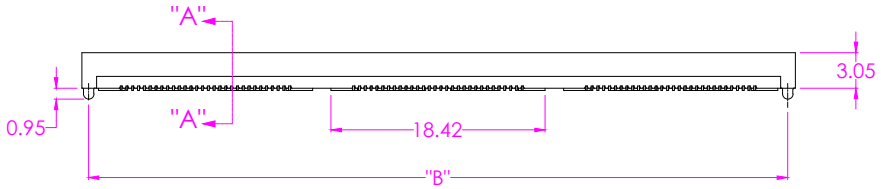

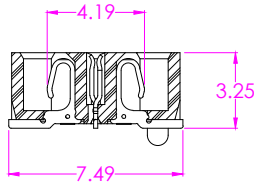

SECTION "A"-"A"
SCALE 2:1

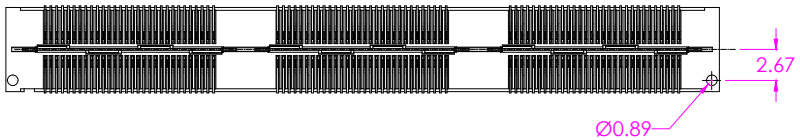

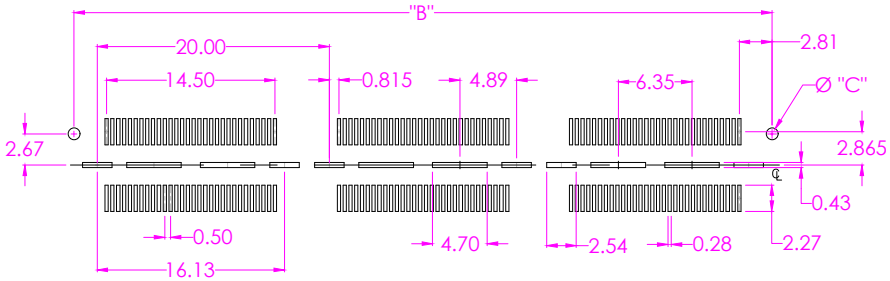

RECOMMENDED PCB LAYOUT
TOLERANCES:±0.05MM
STENCIL TO BE 0.152MM THICKNESS

TABLE 1		
POSITION	DIM. "A"	DIM. "B"
-030	21.31	20.13
-060	41.31	40.13
-090	61.38	60.13
-120	81.38	80.14
-150	101.37	100.14

TABLE 2	
OPTION	DIM. Ø "C"
-SM1	1.02
-SM2	1.19

NOTES:
1:RETENTION FORCE:
CONTACT RETENTION: 8oz MINIMUM;
GROUND PLANE RETENTION: 8oz MINIMUM;
2:BURR ALLOWANCE:0.04 MAXIMUM;
3:COPLANARITY:
-30 THUR -60POSITIONS:0.10MM
-90 THUR -150 POSITIONS:0.15MM;
4:CURRENT RATING:
CONTACT: 2A PER PINS (2 PINS POWERED);
GROUND PLANCE: 25A PER GROUND PLANE
(1 GROUND PLANE POWERED);
5:OPERATING TEMP RATING: -55°C TO +125°C;
6:VOITAGE RATING: 175 VAC (5MM STACK HENGHT);
7:INSULATOR MATERIAL: LCP. UL94V-0,BLACK;
8:CONTACT MATERIAL: PHOSPHOR BRONZE;
9:PLATING: SEE ORDERING INFORMATION.

TOLERANCE UNSPECIFIED	
Dimension	Angle
. ±0.5	±2°
.X ±0.3	
.XX ±0.13	
.XXX ±0.05	

东莞市文章济美电子有限公司

DESCRIPTION:
0.5MM DOUBLE ROW HS SOCKET ASSEMBLY

DRAWN BY:	LIU	SIZE: A4	UNIT: MM	PART No.:5001-QSH0532-**FR-L0-B
CHECKED BY:	ZHOU	SCALE: 1:1	PROJECTION:	REV: A
APPROVED BY:	HUANG	Email:	WWW.JMECONN.COM	SHEET: 1/1

RoHS Compliant

DIFFERENTIAL PAIRS

REV.	ECN NO	LTR	DESCRIPTION	REVISER	DATE
A			Initial release.	LIU	2020.12.29

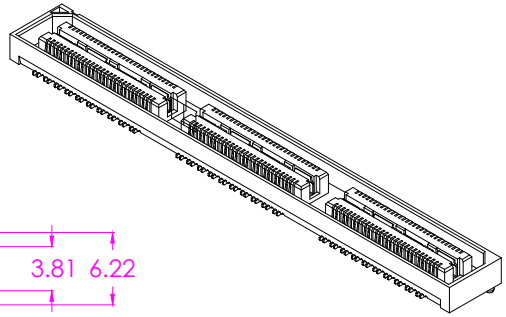

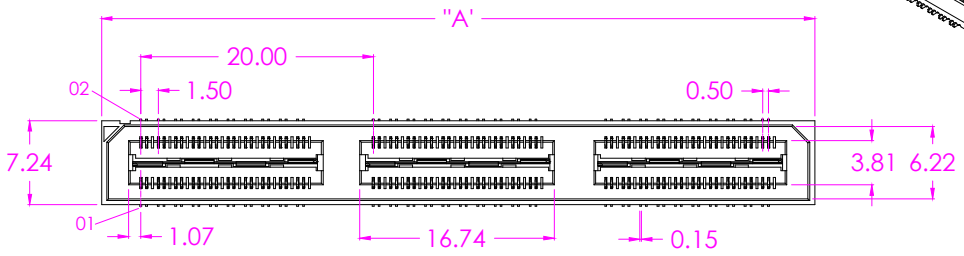

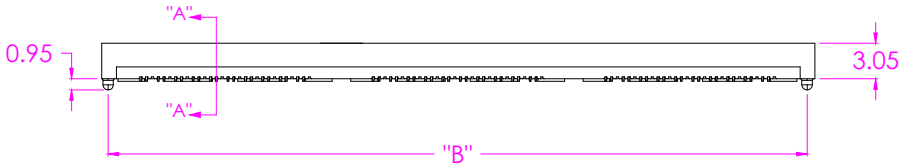

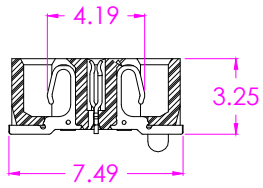

SECTION "A"-"A"
SCALE 2:1

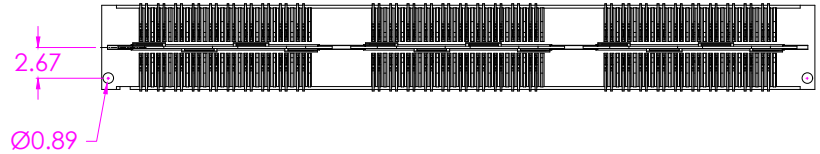

TABLE 1		
POSITION	DIM. "A"	DIM. "B"
-20	21.31	20.13
-40	41.31	40.13
-60	61.38	60.13
-80	81.38	80.14
-100	101.37	100.14

TABLE 2	
OPTION	DIM. Ø "C"
-SM1	1.02
-SM2	1.19

NOTES:
1:RETENTION FORCE:
CONTACT RETENTION: 5oz MINIMUM;
GROUND PLANE RETENTION: 1LB MINIMUM;
2:BURR ALLOWANCE:0.04 MAXIMUM;
3:COPLANARITY:
-20 THUR -60 POSITIONS:0.10MM
-80 THUR -100 POSITIONS:0.15MM;
4:CURRENT RATING:
CONTACT: 2A PER PINS (2 PINS POWERED);
GROUND PLANCE: 23A PER GROUND PLANE
(1 GROUND PLANE POWERED);
5:OPERATING TEMP RATING: -55°C TO +125°C;
6:VOITAGE RATING: 225 VAC (5MM STACK HENGHT);
7:INSULATOR MATERIAL: LCP. UL94V-0,BLACK;
8:CONTACT MATERIAL: PHOSPHOR BRONZE;
9:PLATING: SEE ORDERING INFORMATION.

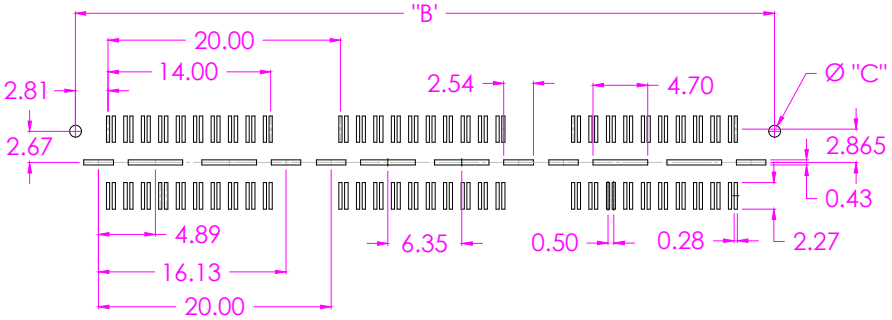

RECOMMENDED PCB LAYOUT
TOLERANCES:±0.05MM
STENCIL TO BE 0.152MM THICKNESS

TOLERANCE UNSPECIFIED	
Dimension	Angle
. ±0.5	±2°
.X ±0.3	
.XX ±0.13	
.XXX ±0.05	

东莞市文章济美电子有限公司

DESCRIPTION:
0.5MM DIFFERENTIAL PAIRS HS SOCKET ASSEMBLY

DRAWN BY:	LIU	SIZE: A4	UNIT: MM	PART No.:5001-QSH0532-**FR-L0-B
CHECKED BY:	ZHOU	SCALE: 1:1	PROJECTION:	REV: A
APPROVED BY:	HUANG	Email:	WWW.JMECONN.COM	SHEET: 1/1