DATA SHEET 数据表

Revise History 修订记录

Rev.版本	Descriptions描述	Date日期	Page页
1.0	-	23-10-2009	-
2.0	Renew form更新表格	15-12-2015	-
2.1	Renew form更新表格	10-11-2018	-
2.2	Renew form更新表格	27-12-2021	-
2.3	Renew form更新表格	23-10-2023	-
2.4	Renew form更新表格	10-12-2024	-

Contains trade secret information which is the property of Ekinglux and shall not be made available to, or copied or used by anyone outside Ekinglux without its written authorization. Copyright©2021 Ekinglux Optoelectronics Co., Ltd. All rights reserved.
包含属于亿晶源光电财产的商业秘密信息，未经亿晶源光电书面授权，不得向亿晶源光电以外的任何人提供、复制或使用。版权所有©2024 亿晶源光电有限公司保留所有权利。

Features 特征

- Low power consumption, high reliability.低功耗,高可靠性.
- A variety of exterior dimensions.多种多样的外形尺寸.
- The color of LED lights can be freely selected and combined. LED 灯的颜色可自由选择并组合.
- The product itself will maintain a RoHS compliant version and comply with EU REACH.
  产品本身将保持符合 RoHS 标准的版本,符合欧盟 REACH.

Application 应用

- Status indicator,communication equipment.状态指示器,通讯设备.

Part Number 产品型号	Dice Material 芯片材质	Emitted Color 发光颜色	Lens Color 胶体形态
ELH93B-50RD1-3.8	AlGaInP	Red	Red Diffused

Electro-Optical Characteristics 电光参数(Ta=25°C)

Parameter 参数	Symbol 符号	Min. 最小值	Typ. 中间值	Max. 最大值	Unit 单位	Test Condition 测试条件
Luminous Intensity *1 亮度	IV	100	-	600	mcd	IF=20mA
Forward Voltage 正向电压	VF	1.80	2.00	2.40	V	
Radiation Bandwidth 半波宽	△λ	-	20	-	nm	
Peak Wavelength 峰值波长	λp	-	630	-	nm	
Dominant Wavelength 主波长	λd	616	620	628	nm	
Viewing Angle *2 发光角度	2θ1/2	-	60	-	deg	
Reverse Current 反向电流	IR	-	-	10	uA	VR=5V

Notes 备注:

1.A Luminous Intensity is measured with a light sensor and filter combination that approximates the CIE eye-response curve. 用接近 CIE 眼睛响应曲线的光传感器和滤波器组合来测量亮度.

2. 2θ1/2 is the o-axis angle where the luminous intensity is 1⁄2 the peak intensity. 2θ1/2 是 0 轴角,其中发光强度是峰值强度的 1/2.

Absolute Maximum Ratings 绝对最大额定值(Ta=25℃)

Parameter 参数	Symbol 符号	Max.最大值 Red	Unit 单位
Power Dissipation 消耗功率	P_d	60	mW
Peak Forward Current *1 脉冲峰值电流	I_{FP}	100	mA
Forward Current 正向电流	I_F	25	mA
Operating Temperature Range 工作温度	T_{opr}	-40to+85	°C
Storage Temperature Range 贮存温度	T_{stg}	-40to+90	°C
Wave Soldering 波峰焊	T_{sld}	260°C for 5 secs	

Notes 备注: 1.Duty Factor=10%, Frequency=1kHz. 占空因数=10%,频率=1kHz.

Optical & Electrical Characteristics Curves 光电特性曲线

Relative Intensity vs Wavelength

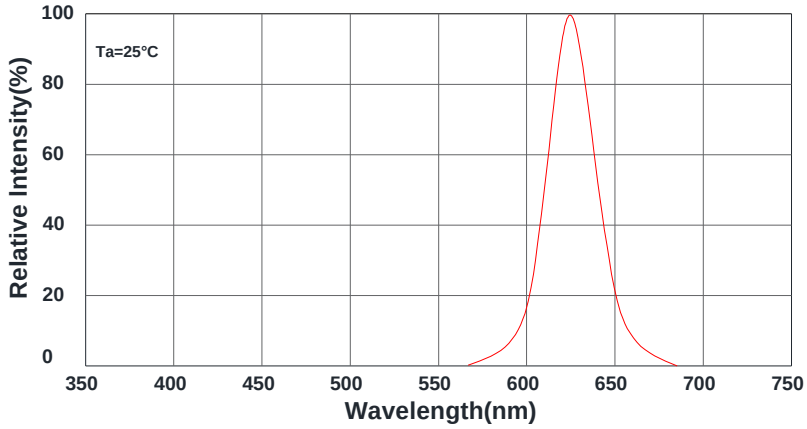

Forward Current vs. Forward Voltage

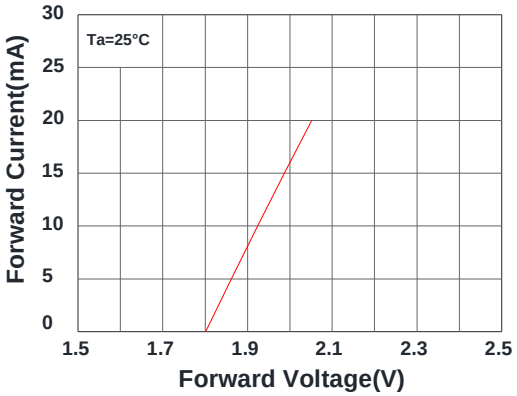

Luminous Intensity vs. Forward Current

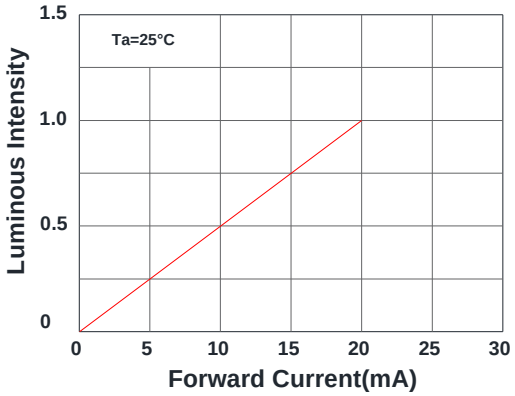

Forward Current Derating Curve

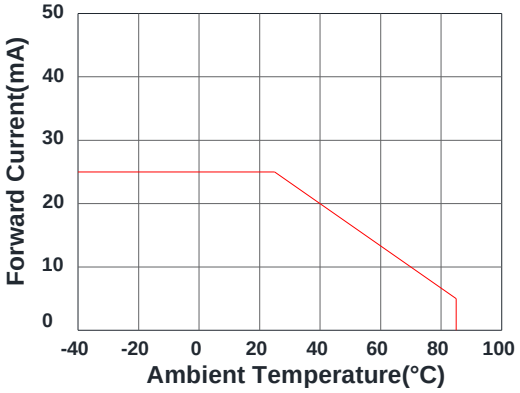

Luminous Intensity vs. Ambient Temperaturs

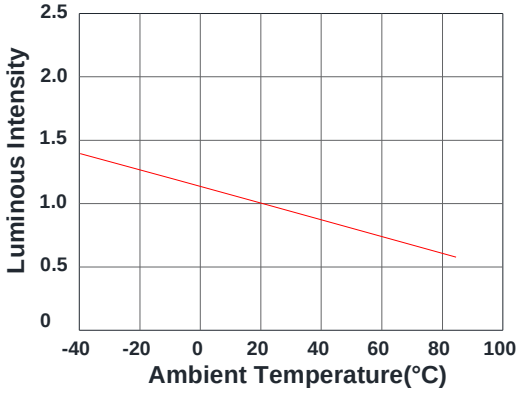

Radiation Diagram

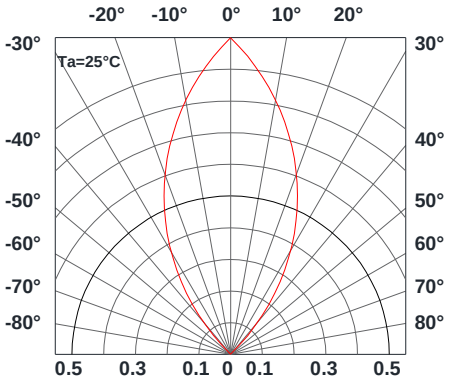

Package Dimension 封装尺寸 (Unit:mm,Tolerance: ±0.20mm)

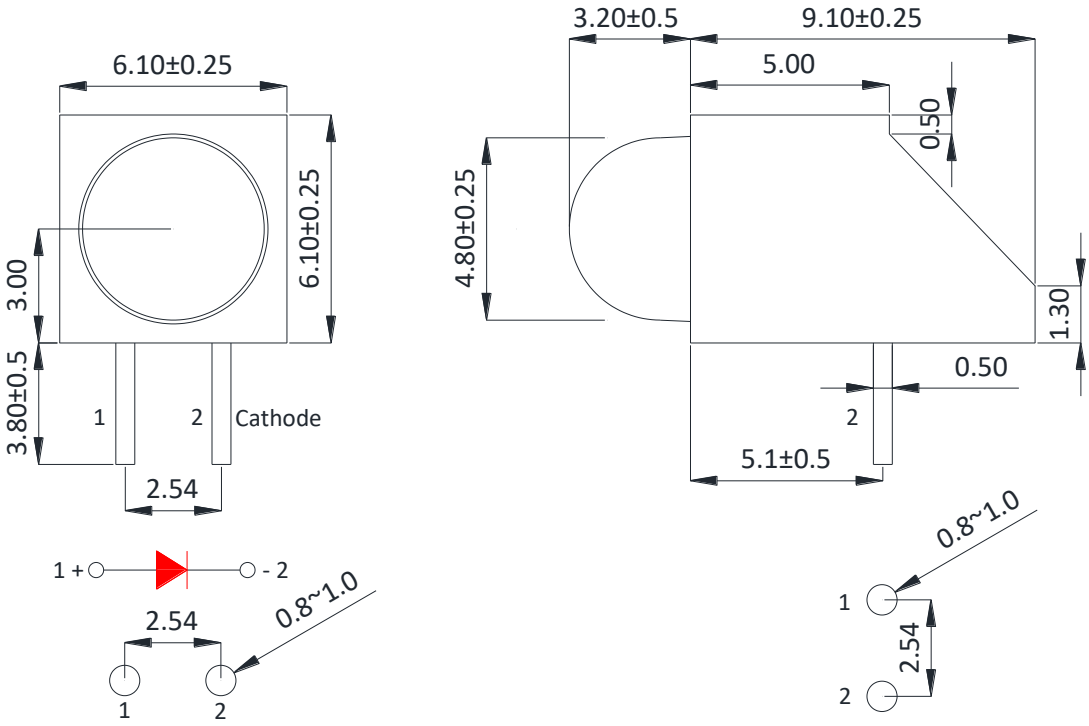

Packaging method 包装方法

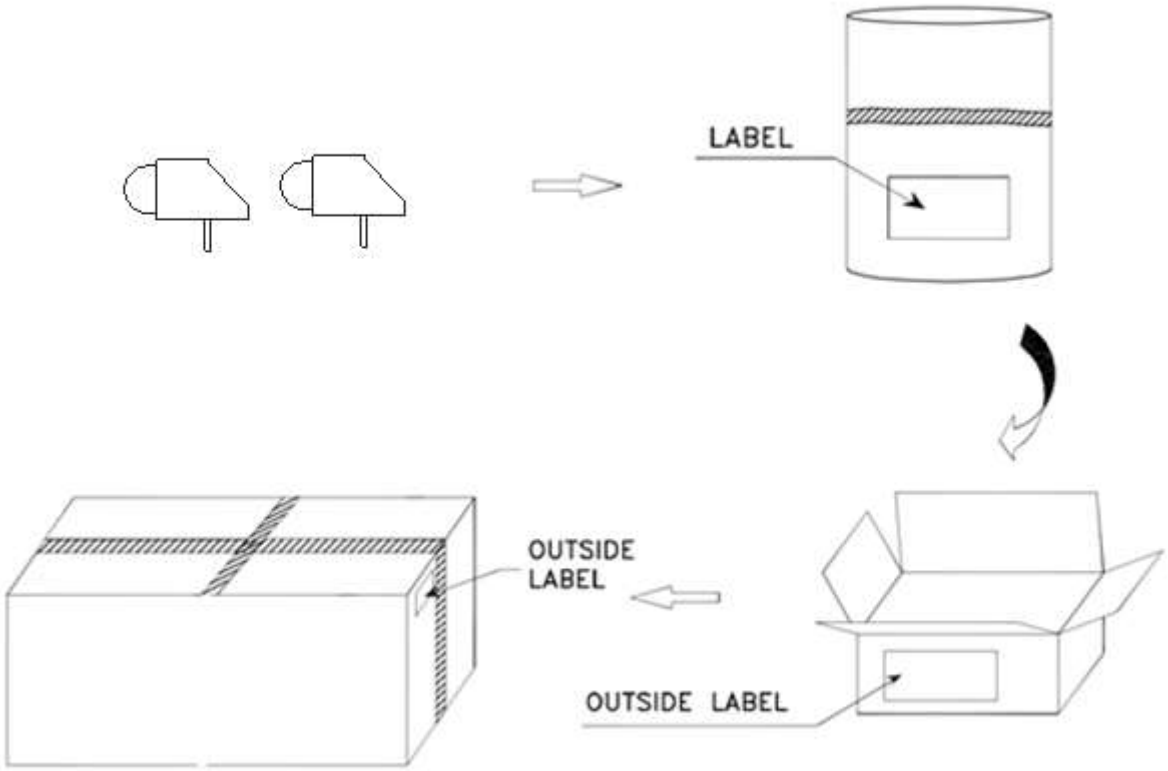

Packing Quantity: 500 PCS/bag. 包装数量：500 件/袋。

Label Style 标签样式



Reliability Test Items And Conditions 信赖性测试项目及条件

Test Items 项目	Ref. Standard 参考标准	Test Condition 测试条件	Time 时间	Quantity 数量	Ac/Re 接收/拒收
Resistance to Soldering Heat 耐焊性	IEC/TR 60068-3-122014	Temp:260℃ max T=8 sec	2 times	22PCS	0/1
Temperature Cycle 温度循环	IEC60068-2-14 : 2009	85℃±5℃ 15min ↑ ↓5 min -40℃±5℃ 15min	100Cycles	22PCS	0/1
High Humidity Heat Life Test 高温高湿老化测试	IEC60068-2-78:2001	Ta=85℃ RH=85% IF=I_{FT}	1000H	22PCS	0/1
High Temperature Storage 高温储存	Tested with Internal standards 按内部标准测试	Temp:85℃±5℃	1000H	22PCS	0/1
Low Temperature Storage 低温储存	IEC60068-2-1:2007	Temp:-40℃±5℃	1000H	22PCS	0/1
Life Test 常温通电老化	Tested with Internal standards 按内部标准测试	Ta=25℃±5℃ IF=I_{FT}	1000H	22PCS	0/1

Failure determination criteria 失效判定标准

Test Items 项目	Symbol 符号	Test Condition 测试条件	Failure Criteria判定标准	
			Min.最小值	Max.最大值
Forward Voltage正向电压	VF	IF=IFT	-	U.S.L*)x1.1
Recerse Current反向电流	IR	VR=5V	-	10uA
Luminous Intensity亮度	IV/Φ	IF=IFT	L.S.L*)x0.7	-

U.S.L: Upper Specification Limit 规格上限　　L.S.L: Lower Specification Limit 规格下限

Precautions 注意事项

1. Lead Forming 引脚成型

1.1 During lead formation, the leads should be bent at a point at least 3mm from the base of the epoxy bulb. 在引脚形成过程中，引脚应在距离环氧灯泡底部至少 3mm 的位置弯曲。

1.2 Lead forming should be done before soldering. 焊接前应进行引脚成型。

1.3 Avoid stressing the LED package during leads forming. The stress to the base may damage the LED's characteristics or it may break the LEDs. 在引脚成型过程中，避免对 LED 封装施加应力。基座的应力可能会损害 LED 的特性，也可能会损坏 LED。

1.4 Cut the LED lead frames at room temperature. Cutting the lead frames at high temperatures may cause failure of the LEDs. 在室温下切割 LED 引脚。在高温下切割引脚可能会导致 LED 故障。

1.5 When mounting the LEDs onto a PCB, the PCB holes must be aligned exactly with the lead position of the LED. If the LEDs are mounted with stress at the leads, it causes deterioration of the epoxy resin and this will degrade the LEDs. 将 LED 安装到 PCB 上时，PCB 孔必须与 LED 的引脚位置精确对齐。如果 LED 在引脚处受到应力，则会导致环氧树脂劣化，从而降低 LED 的性能。

2. Storage 储存

2.1 The LEDs should be stored at 30°C or less and 70%RH or less after being shipped from After the LED is shipped from our company and the storage life limits are 3 months. If the LEDs are stored for 3 months or more, they can be stored for a year in a sealed container with a nitrogen atmosphere and moisture absorbent material. LED 从我司发货后，应存放在 30°C 或更低、70%相对湿度或更低的温度下，储存寿命限制为 3 个月。如果 LED 储存 3 个月或更长时间，它们可以在氮气气氛和吸湿材料的密封容器中储存一年。

2.2 Please avoid rapid transitions in ambient temperature, especially, in high humidity environments where condensation can occur. 请避免环境温度的快速转变，特别是在可能发生冷凝的高湿度环境中。

3. Soldering 焊接

3.1 Careful attention should be paid during soldering. When soldering, leave more then 3mm from solder joint to epoxy bulb, and soldering beyond the base of the tie bar is recommended. 焊接时应小心。焊接时，焊点与环氧灯泡之间应留出 3mm 以上的距离，建议焊接到拉杆底座之外。

3.2 Recommended Wave Soldering Profiles 推荐波峰焊条件:

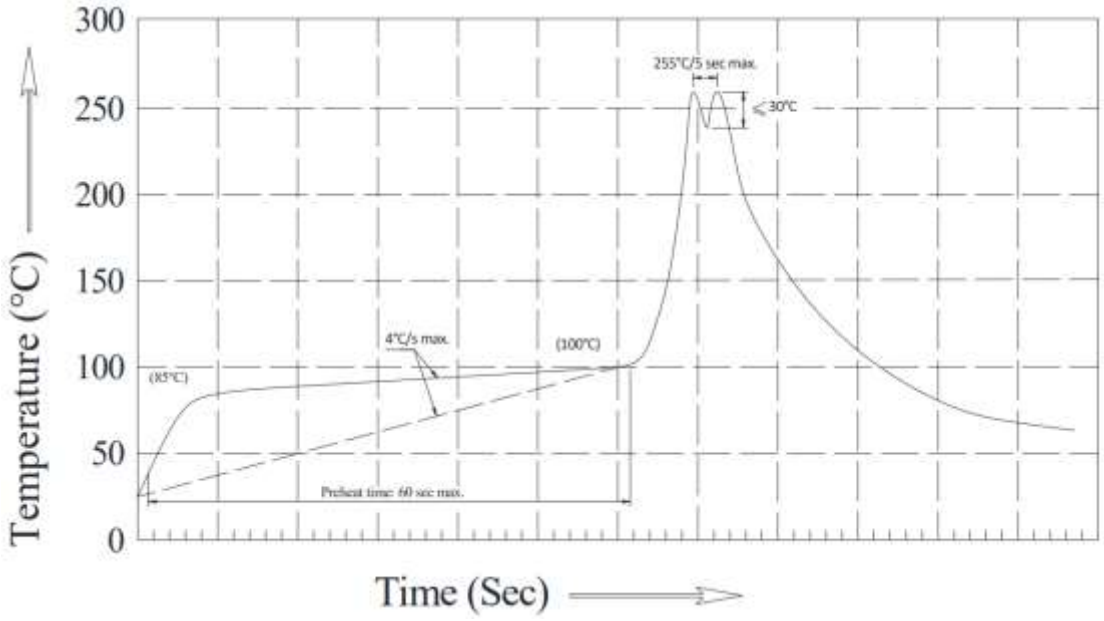

Note 备注:

1.Recommend pre-heat temperature of 105° C or less (as measured with a thermocouple attached to the LED pins) prior to immersion in the solder wave with a maximum solder bath temperature of 260° C. 在浸入 LED 引脚之前，建议预热温度为 105°C 或更低（用连接到 LED 引脚的热电偶测量），最高焊料浴温度为 260°C 的焊料波。

2.Peak wave soldering temperature between 245° C ~ 255°C for 3 sec (5 sec max). 波峰焊接温度在 245°C~255°C 之间，持续 3 秒（最多 5 秒）。

3.Do not apply stress to the epoxy resin while the temperature is above 85°C. 温度高于 85°c 时，不要对环氧树脂施加应力。

4.Fixtures should not incur stress on the component when mounting and during soldering process. 在安装和焊接过程中，夹具不应给组件带来应力。

5.SAC 305 solder alloy is recommended. 推荐使用 SAC 305 焊料合金。

6.No more than one wave soldering pass. 波峰焊焊道不得超过一道。

3.3 Recommended soldering conditions 推荐焊接条件:

Soldering Iron		Wave Soldering	
Temperature	300℃ Max.	Pre-heat	100℃ Max.
Soldering Time	3 sec. Max. (one time only)	Pre-heat Time	60 sec. Max.
		Solder Wave	260℃ Max.
		Soldering Time	5 sec. Max.

Note 备注:
Excessive soldering temperature and / or time might result in deformation of the LED lens or catastrophic failure of the LED.过高的焊接温度和/或时间可能会导致 LED 透镜变形或 LED 发生灾难性故障。

3.4 Avoiding applying any stress to the lead frame while the LEDs are at high temperature particularly when soldering. 避免在 LED 处于高温时对引脚框架施加任何应力，特别是在焊接时。

3.5 Dip and hand soldering should not be done more than one time 浸焊和手工焊接不应超过一次

3.6 After soldering the LEDs, the epoxy bulb should be protected from mechanical shock or vibration until the LEDs return to room temperature. 焊接 LED 后，应保护环氧灯泡免受机械冲击或振动，直到 LED 恢复到室温。

3.7 A rapid-rate process is not recommended for cooling the LEDs down from the peak temperature. 不建议使用快速过程将 LED 从峰值温度冷却下来

3.8 Although the recommended soldering conditions are specified in the above table, dip or hand soldering at the lowest possible temperature is desirable for the LEDs. 尽管上表中规定了推荐的焊接条件，但 LED 最好在尽可能低的温度下进行浸焊或手工焊接。

3.9 Wave soldering parameter must be set and maintain according to recommended temperature and dwell time in the solder wave. 波峰焊参数必须根据推荐的温度和在焊波中的停留时间进行设置和维护。

4. Cleaning 清洁

4.1 When necessary, cleaning should occur only with isopropyl alcohol at room temperature for a duration of no more than one minute. Dry at room temperature before use. 必要时，只能在室温下用异丙醇清洗，清洗时间不超过一分钟。使用前在室温下干燥。

4.2 Do not clean the LEDs by the ultrasonic. When it is absolutely necessary, the influence of ultrasonic cleaning on the LEDs depends on factors such as ultrasonic power and the assembled condition. Ultrasonic cleaning shall be pre-qualified to ensure this will not cause damage to the LED. 不要用超声波清洁 LED。当绝对必要时，超声波清洗对 LED 的影响取决于超声波功率和组装条件等因素。超声波清洗应经过资格预审，以确保不会对 LED 造成损坏。

5. Assembly method 组装方法

The spacing between LED leadframe must match the spacing between mounting holes on the PCB when placing components. If LED leadframe need to be formed to ensure that the spacing between leadframe matches the spacing between PCB holes. 放置元件时，LED 引脚之间的间距必须与 PCB 上安装孔之间的间距相匹配。如果需要形成 LED 引脚以确保引脚之间的间距与 PCB 孔之间的间距相匹配。