RoHS Compliant

REV.	MODIFICATION	ECN No.	NAME	DATE
A0	NEW		LEN.SONG	2022.01.05

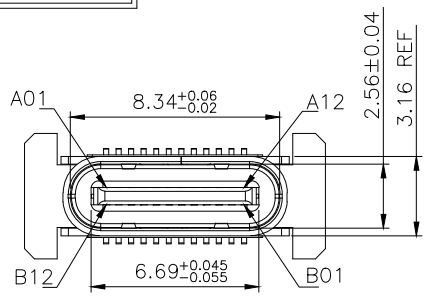

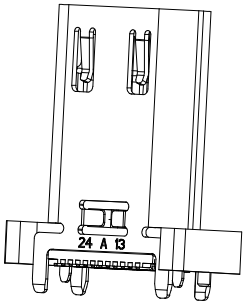

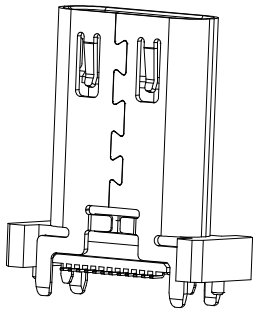

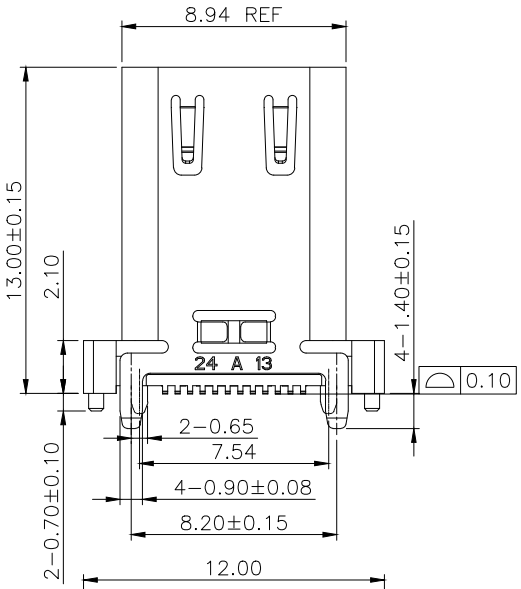

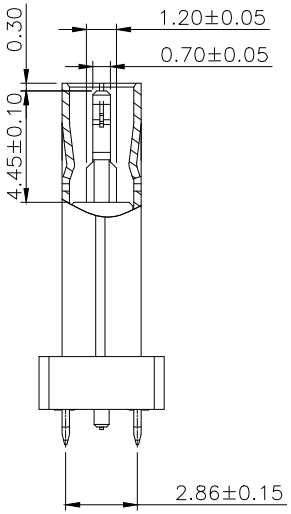

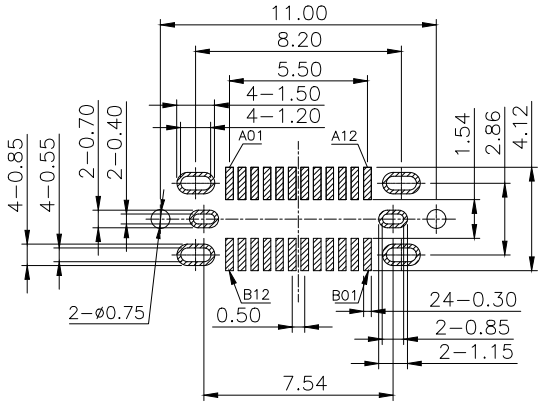

RECOMMENDED P.C.B. LAYOUT(俯视图)

TOLERANCE UNSPECIFIED ±0.05mm

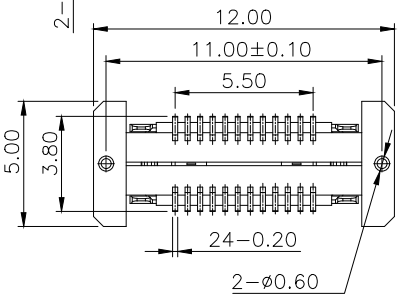

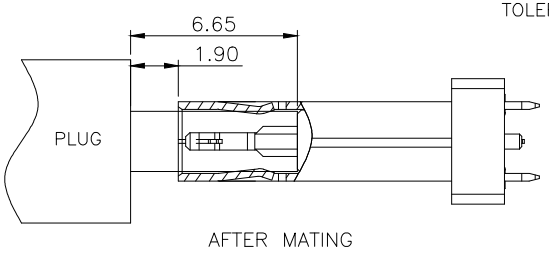

AFTER MATING

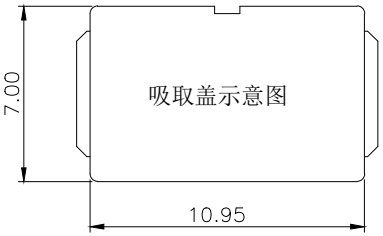

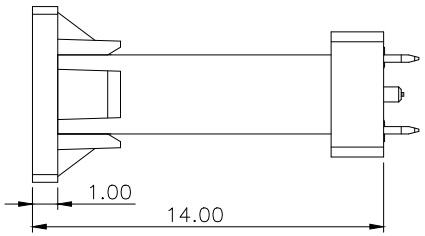

SPECIFICATION:

1 ´ ELECTRICAL:
- 1.1 CURRENT RATING:5A;
- 1.2 CONTACT RESISTANCE:40mΩ Max;
- 1.3 DIELECTRIC WITHSTANDING VOLTAGE:100V AC;
- 1.4 INSULATION RESISTANCE:100 MΩ MIN;

2 ´ MECHANICAL;
- 2.1 MATING FORCE:5~20N;
- 2.2 UNMATING FORCE:8~20N;
- 2.3 DURABILITY:10000 CYCLES;6~20N AFTER DURABILITY TEST;

3 ´ MATERIAL:
- 3.1 HOUSING&MOLDING:BLACK LCP UL94V−0;
- 3.2 TERMINAL:C18400 T=0.12mm;
- 3.3 SHELL:SUS304 T=0.30mm;
- 3.4 MID PLATE:SUS301 T=0.15mm;

4 ´ PLATING SPECIFICATION:
- 4.1 TERMINAL:CONTACT POINT GOLD PLATED 3u"Min
  PIN WELDING AREA GOLD PLATED 1u"Min.
- 4.2 NI 40U"Min. UNDER PLATED OVER ALL.
- 4.3 SHELL:PLATED Ni 50u"Min(Salt spray 48H)

5 ´ ELECTROPLATED PRODUCTS NEED TO UNDERGO TIN ADHESION TESTING: THE TIN ADHESION AREA SHOULD REACH OVER 95%.

6 ´ SMT REFLOW SOLDERING (PEAK VALUE 260 °C ± 5 ° C) SHALL BE FREE OF BLISTERING, GLUE MELTING AND POOR COLOR CHANGE (DEFORMATION WITHIN TOLERANCE)

7 ´ OPERATING TEMPERATURE : −40°C~+85°C

A1	GND	B12	GND
A2	TX1+	B11	RX1+
A3	TX1−	B10	RX1−
A4	VBUS	B9	VBUS
A5	CC1	B8	SBU2
A6	D+	B7	D−
A7	D−	B6	D+
A8	SBU1	B5	CC2
A9	VBUS	B4	VBUS
A10	RX2−	B3	TX2−
A11	RX2+	B2	TX2+
A12	GND	B1	GND
PIN	SIGNAL NAME	PIN	SIGNAL NAME

广东咏华科技有限公司
Guangdong Yonghua Technology Co., Ltd

X. ±0.25	ANGLES ±2°	INTENDED USE:	TITLE: TYPE-C 24P母座 立贴SMT 外壳带弹 H=13.0 A款 黑色LCP 端C18400 接触 3u焊脚1u 外壳SUS304 卷装
X.x ±0.20			
X.xx ±0.15			
X.xxx ±0.10		APPD.:	PART NO.: YH-002003
MAT'L.: SEE NOTES		CHKD.:	DWG. NO.:
FINISH:		DR.: Len.Song	SCALE: 1:1 PAGE: 1/1
			UNIT: mm REV.: A0

RoHS Compliant

REV.	MODIFICATION	ECN No.	NAME	DATE
A0	NEW		LEN.SONG	2022.01.05

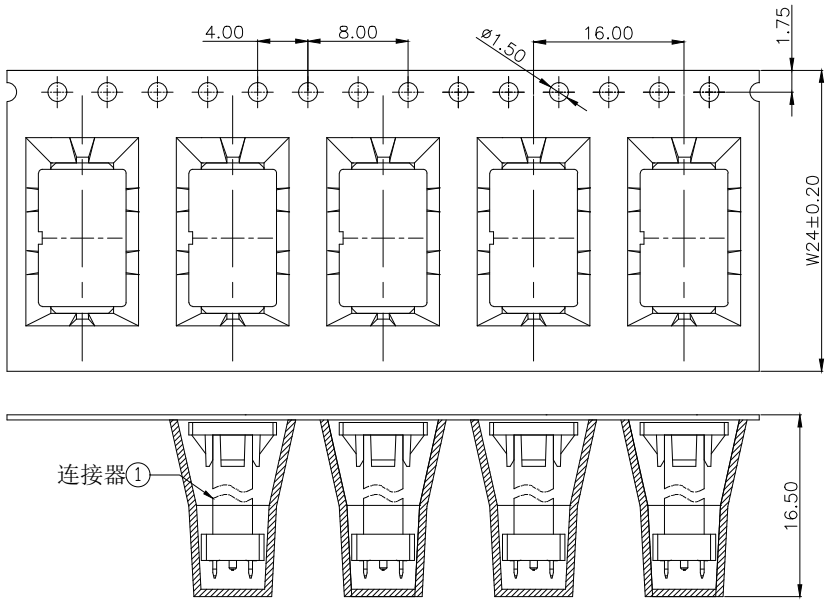

产品入载带示意图

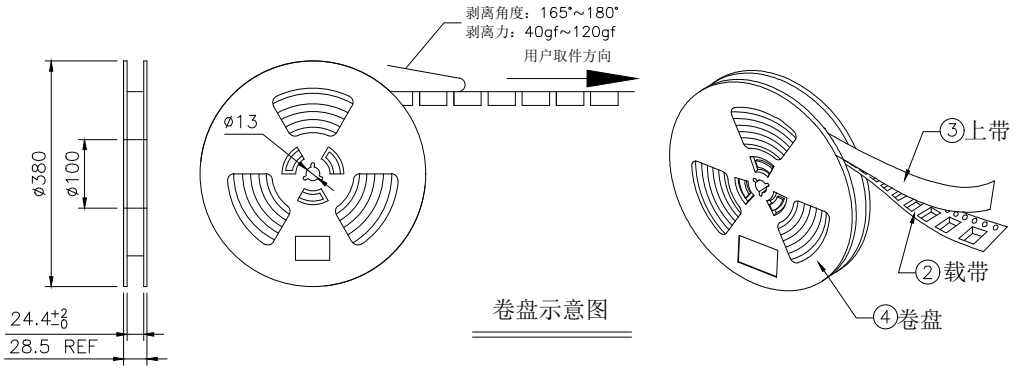

卷盘示意图

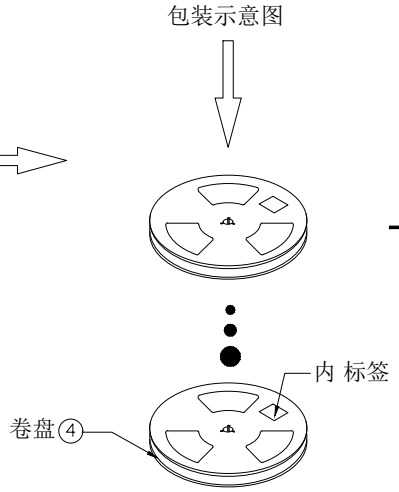

卷盘贴标签示意图

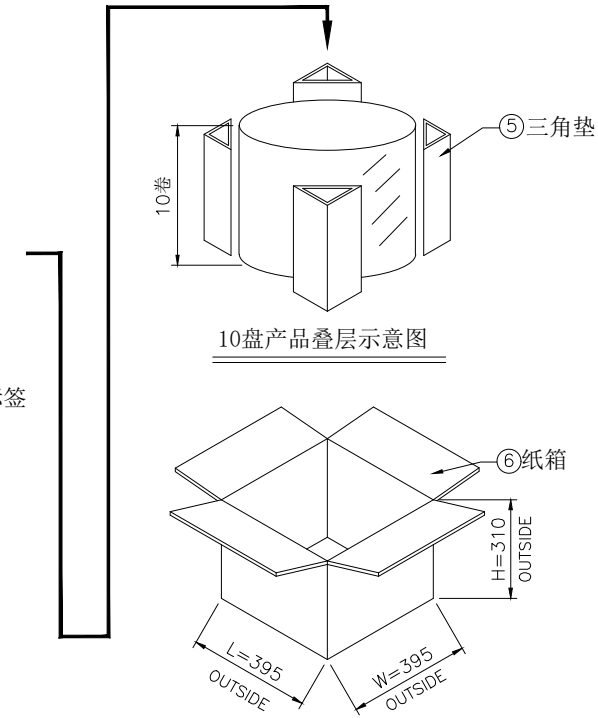

10盘产品叠层示意图

技术要求：

1. 载带首尾各留出12PCS空格不装产品；
2. 每穴放置1PCS产品，每卷装370PCS产品，放置方式如图所示；
3. 将包装好的产品；每盘必需贴上内标签；将贴好内标签的产品每10盘堆叠.
4. 在纸箱四角垫上4个三角垫，然后把装好产品的卷盘放入纸箱中，最后用胶带封箱；
   （如客户有要求，请按客户要求包装出货）
5. 上带与载带的剥离力：40gf~120gf，跳动量在30gf内；
   （剥离角度：165°~180°，剥离速度：250~300mm/min）
6. 产品符合RoHS环保标准要求.

序号	物料名称	物料编号	规 格	描 述
06	纸箱	B-05-0012	395mm*395mm*310mm	1 PCS
05	三角垫	/	300mm*260mm*7mm	4 PCS
04	卷盘	/	D=380mm, d=100mm, H=28.5mm	10 PCS
03	上带	/	W=21.3mm, T=0.05mm	6304 mm
02	载带	B-03-0035	W=24mm, T=0.50mm, P=16.0mm	6304 mm
01	连接器	/	24PIN, SMT	3700 PCS

广东咏华科技有限公司
Guangdong Yonghua Technology Co., Ltd

X. ±0.15	ANGLES ±2°	INTENDED USE:	TITLE: TYPE-C 24P母座 立贴 H=13.0 A款 包装规范
X.x ±0.10			
X.xx ±0.05			PART NO.: YH-002003
X.xxx ±0.03		APPD.:	DWG. NO.:
MAT'L.: SEE NOTES		CHKD.:	SCALE: 1:1 PAGE: 1/1
FINISH:		DR.: Len.Song	UNIT: mm REV.: A0