RoHS Compliant

REV.	MODIFICATION	ECN No.	NAME	DATE
A0	NEW		LEN.SONG	2022.01.05

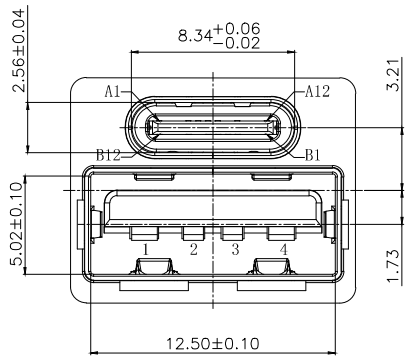

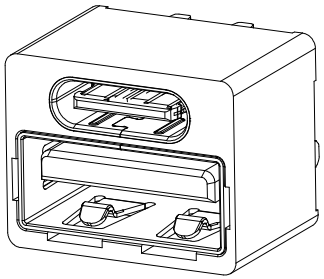

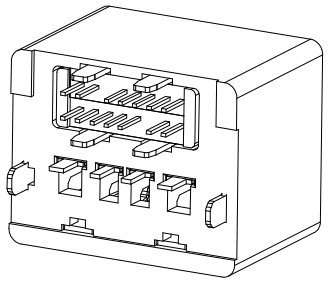

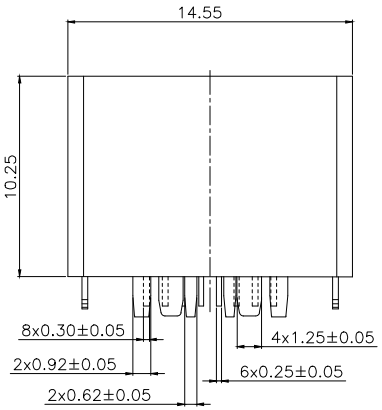

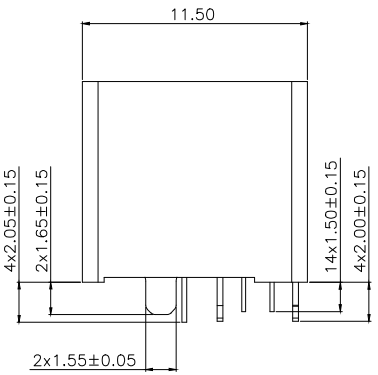

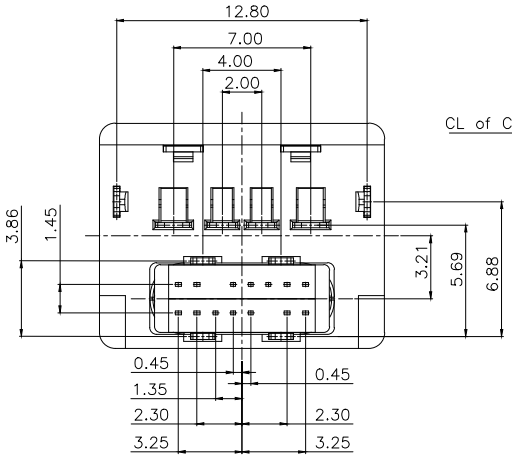

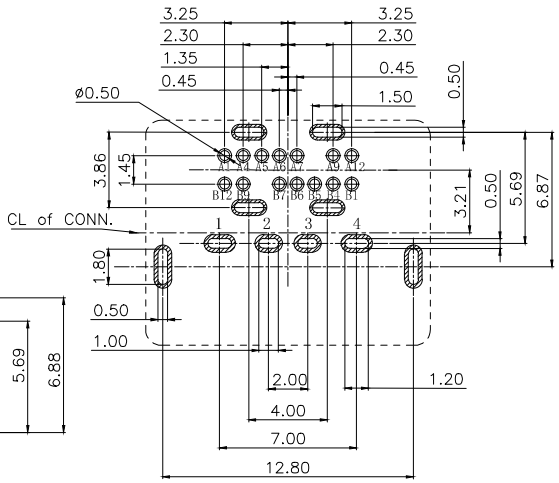

RECOMMENDED P.C.B. LAYOUT
TOLERANCE UNSPECIFIED ±0.05mm

Type C pin Def:

A1	GND	B12	GND
A4	VBUS	B9	VBUS
A5	CC1	B7	D−
A6	D+	B6	D+
A7	D−	B5	CC2
A9	VBUS	B4	VBUS
A12	GND	B1	GND
PIN	SIGNAL NAME	PIN	SIGNAL NAME

USB 2.0 pin Def:

1	VBUS
2	D−
3	D+
4	GND
PIN	SIGNAL NAME

SPECIFICATION:
1、ELECTRICAL:(TYPE−C)
1.1 CURRENT RATING:5.0A
1.2 CONTACT RESISTANCE:40mΩ Max;
1.3 DIELECTRIC WITHSTANDING VOLTAGE:100V AC;
1.4 INSULATION RESISTANCE:100 MΩ Min;
2、MECHANICAL;
2.1 MATING FORCE:5~20N;
2.2 UNMATING FORCE:8~20N;
2.3 DURABILITY:10000 CYCLES;5~20N AFTER DURABILITY TEST;
3、MATERIAL:
3.1 HOUSING&MOLDING: LCP ORANGE UL94V−0;
3.2 TERMINAL:C7025 T=0.15mm;
3.3 MID PLATE:SUS304 T=0.15mm;
3.4 SHELL: SUS304 T=0.30mm;
4、PLATING SPECIFICATION:
4.1 TERMINAL:
CONTACT AREA GOLD PLATED 3u"Min
SOLDER AREA GOLDPLATED 1u"Min.
NI 40u"Min. UNDER PLATED OVER ALL.
SPECIFICATION:
5、ELECTRICAL:(USB AF)
5.1 CURRENT RATING:3.0A
5.2 CONTACT RESISTANCE:30mΩ Max;
5.3 DIELECTRIC WITHSTANDING VOLTAGE:500V AC;
5.4 INSULATION RESISTANCE:1000 MΩ MIN;
6、MECHANICAL;
6.1 MATING FORCE:5~25N;
6.2 UNMATING FORCE:5~25N;
7、MATERIAL:
7.1 HOUSING&MOLDING: LCP ORANGE UL94V−0;
7.2 TERMINAL:C2680 T=0.25mm;
7.3 SHELL: C2680 T=0.30mm;
8、PLATING SPECIFICATION:
8.1 TERMINAL:
CONTACT AREA GOLD PLATED 1u "MIN
SOLDER AREA PLATED MATTE TIN 100u" MIN.
NI 40u" Min. UNDER PLATED OVER ALL.
9、 ELECTROPLATED PRODUCTS NEED TO UNDERGO TIN ADHESION TESTING: THE TIN ADHESION AREA SHOULD REACH OVER 95%.
10、SMT REFLOW SOLDERING (PEAK VALUE 260 °C ± 5 ° C) SHALL BE FREE OF BLISTERING, GLUE MELTING AND POOR COLOR CHANGE (DEFORMATION WITHIN TOLERANCE)
11、OPERATING TEMPERATURE：−40°C~+85°C

广东咏华科技有限公司
Guangdong Yonghua Technology Co., Ltd

X.: ±0.25	ANGLES ±2°	INTENDED USE:	TITLE: USB 2.0 4P母座 + TYPE−C 14P母座 二合一 立插 H=10.25 LCP橙色 A口 端子C2680 接触1u 焊脚镀雾锡80u" 外壳C2680 C口 端子C7025 接触3u"焊脚1u 外壳SUS304
.X: ±0.20			
.XX: ±0.15		APPD. :	PART NO. : YH-002131
MAT'L. : SEE NOTES		CHKD. :	DWG. NO. :
FINISH:		DR. : Len.Song	SCALE: 1:1 PAGE: 1/1
			UNIT: mm REV. : A0

RoHS Compliant

REV.	MODIFICATION	ECN No.	NAME	DATE
A0	NEW		LEN.SONG	2022.01.05

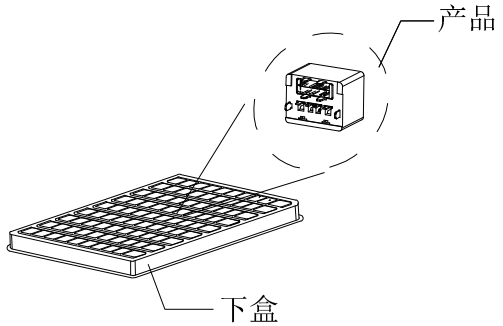

① 100Pcs/盒

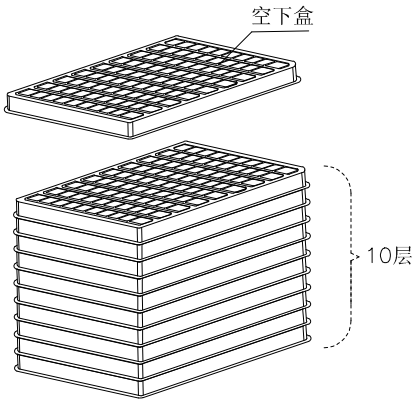

② 10层/叠 (1K)

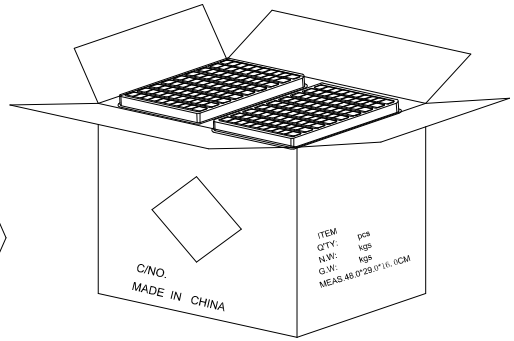

③ 2x1叠=2K/箱

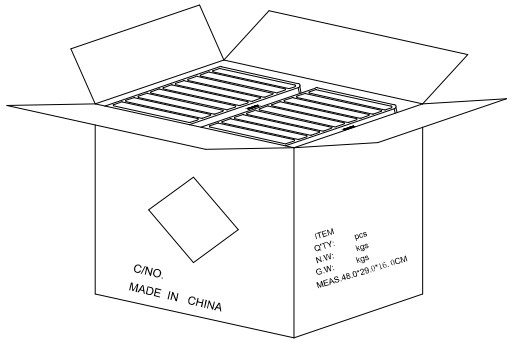

④ 每箱竖放10盒*2,若尾数箱在空间处加装填充物.

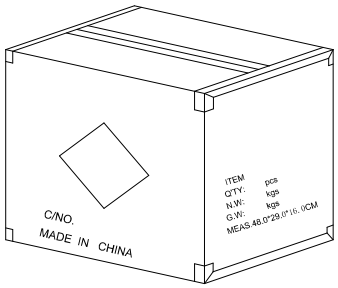

⑤ 外箱用透明胶纸带封"工"字型.

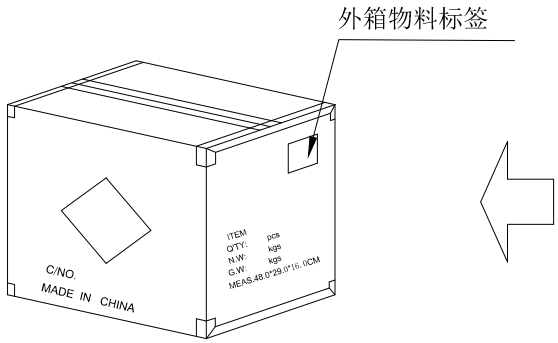

⑥ 依图示粘贴产品或RoHS标签.

备注:
1. 每盒装成品100Pcs;
2. 1叠10层,每叠顶面加一个空下盖;
3. 每箱装20盒(2K);
4. 外箱尺寸与规格: 48.0*29.0*16.0CM
5. 外箱用透明胶纸带封"工"字型;

序号	物料名称	物料编号	规 格	描 述
03	纸箱	B-05-0017	480mm*290mm*160mm	1 PCS
02	下盒	B-01-0019	PET透明 T0.6*L269*W220*H14.5mm	22 PCS
01	连接器	JSX-UB04FA-0059	4PIN+14PIN, DIP	2000 PCS

广东咏华科技有限公司
Guangdong Yonghua Technology Co., Ltd

X.: ±0.25	ANGLES ±2°	INTENDED USE:	TITLE: USB 2.0 4P母座 + TYPE-C 14P母座 二合一 立插 H=10.25 LCP橙色 A口 端子C2680 接触1u 焊脚镀雾锡80u" 外壳C2680 C口 端子C7025 接触3u"焊脚1u 外壳SUS304
.X: ±0.20			
.XX: ±0.15		APPD.:	PART NO.: YH-002131
MAT'L.: SEE NOTES		CHKD.:	DWG. NO.:
FINISH:		DR.: Len.Song	SCALE: 1:1 PAGE: 1/1
			UNIT: mm REV.: A0