Lens driver for Digital Still Camera

Chip description：

GC6125 is a system Lens Driver that uses μ-step driving to make the configuration of the sophisticated, high precision and low noise lens driver system possible. This IC has a built-in driver for both DC moor and voice coil motor and a μ -step controller that decreases CPU power. Therefore, multifunctional lens can be applied.

Chip features：

- Built-in 6 Channel H bridge motor drivers
  1ch-4ch: Voltage control type H-bridge
  (Adaptable to STM 2systems)
  5ch: Voltage / Current control type H-bridge
  6ch: Current control type H-bridge
- 0.5A rms current per channel
- Built-in 2 channels PI driver
- Built-in FLL digital servo circuit
- Built-in PLL circuit for variety system clock
- Built-in STM control circuit: Autonomous control (cache / up down mode), Clock IN control
- Support 1.8V IO （GC6125B）

Chip application：

- Digital still Cameras
- Shaking head machine

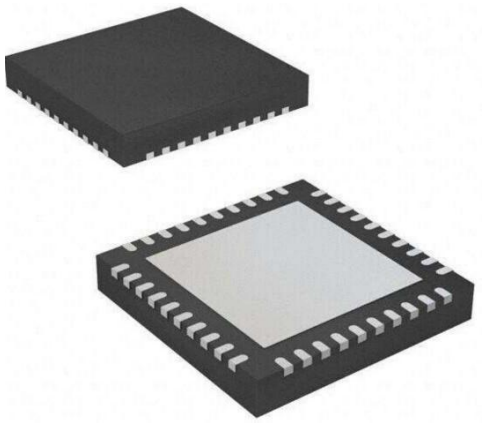

Product name	Package Type	Detail description
GC6125	QFN44	6.0*6.0，e=0.4

Packaging Introduction

Per Tray	Per Box	Per Case
4K	8K	64K

Pin Map:

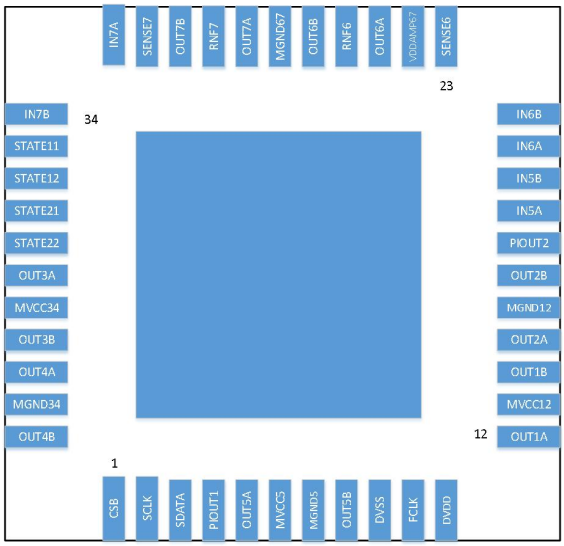

GC6125

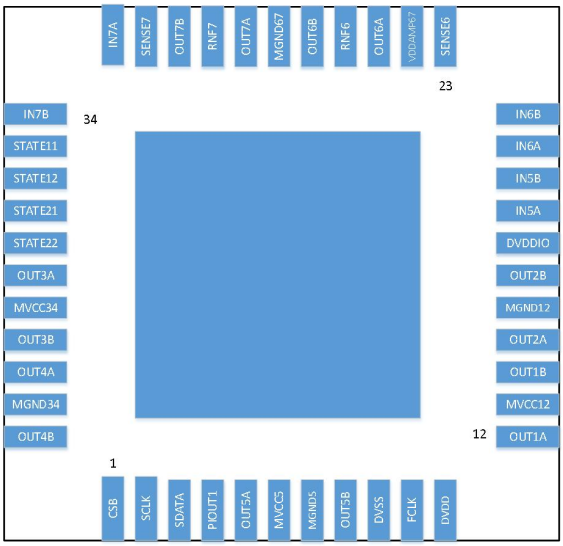

GC6125B

Pin Description:

Pin No.	Pin Name	I/O	Pin Function
1	CSB	I	SPI CSB input
2	SCLK	I	SPI clock input
3	SDATA	I/O	SPI DATA input
4	PIOUT1	O	PI driver output 1
5	OUT5A	O	5ch Driver A output
6	MVCC5	Power	5ch Power Supply
7	MGND5	Gnd	5ch GND
8	OUT5B	O	5ch Driver B output
9	DVSS	Gnd	Ground
10	FCLK	I	system clock input
11	DVDD	Power	Power for digital
12	OUT1A	O	1ch Driver A output
13	MVCC12	Power	1,2ch power supply
14	OUT1B	O	1ch Driver B output
15	OUT2A	O	2ch Driver A output

16	MGND12	Gnd	1,2ch Ground
17	OUT2B	O	2ch Driver B output
18	PIOUT2	O	（GC6125）PI driver output 2
	DVDDIO	Power	（GC6125B）power for IO
19	IN5A	I	5ch input A
20	IN5B	I	5ch input B
21	IN6A	I	6ch input A
22	IN6B	I	6ch input B
23	SENSE6	IO	6ch current sense resistor connection
24	VDDAMP 67	Power	ch6,ch7 logic Power Supply
25	OUT6A	O	6ch output A
26	RNF6	Power	ch6 driver Supply
27	OUT6B	O	6ch output B
28	MGND67	Gnd	6,7ch Ground
29	OUT7A	O	7ch output A
30	RNF7	Power	ch7 driver Supply
31	OUT7B	O	7ch output B
32	SENSE7	IO	7ch current sense resistor connection
33	IN7A	I	7ch input A
34	IN7B	I	7ch input B
35	STATE11	O	state11 logic output
36	STATE12	O	state12 logic output
37	STATE21	O	state21 logic output
38	STATE22	O	state22 logic output
39	OUT3A	O	3ch Driver A output
40	MVCC34	Power	3,4ch power supply
41	OUT3B	O	3ch Driver B output
42	OUT4A	O	4ch Driver A output
43	MGND34	Gnd	3,4ch Ground
44	OUT4B	O	4ch Driver B output

Block Diagram ：

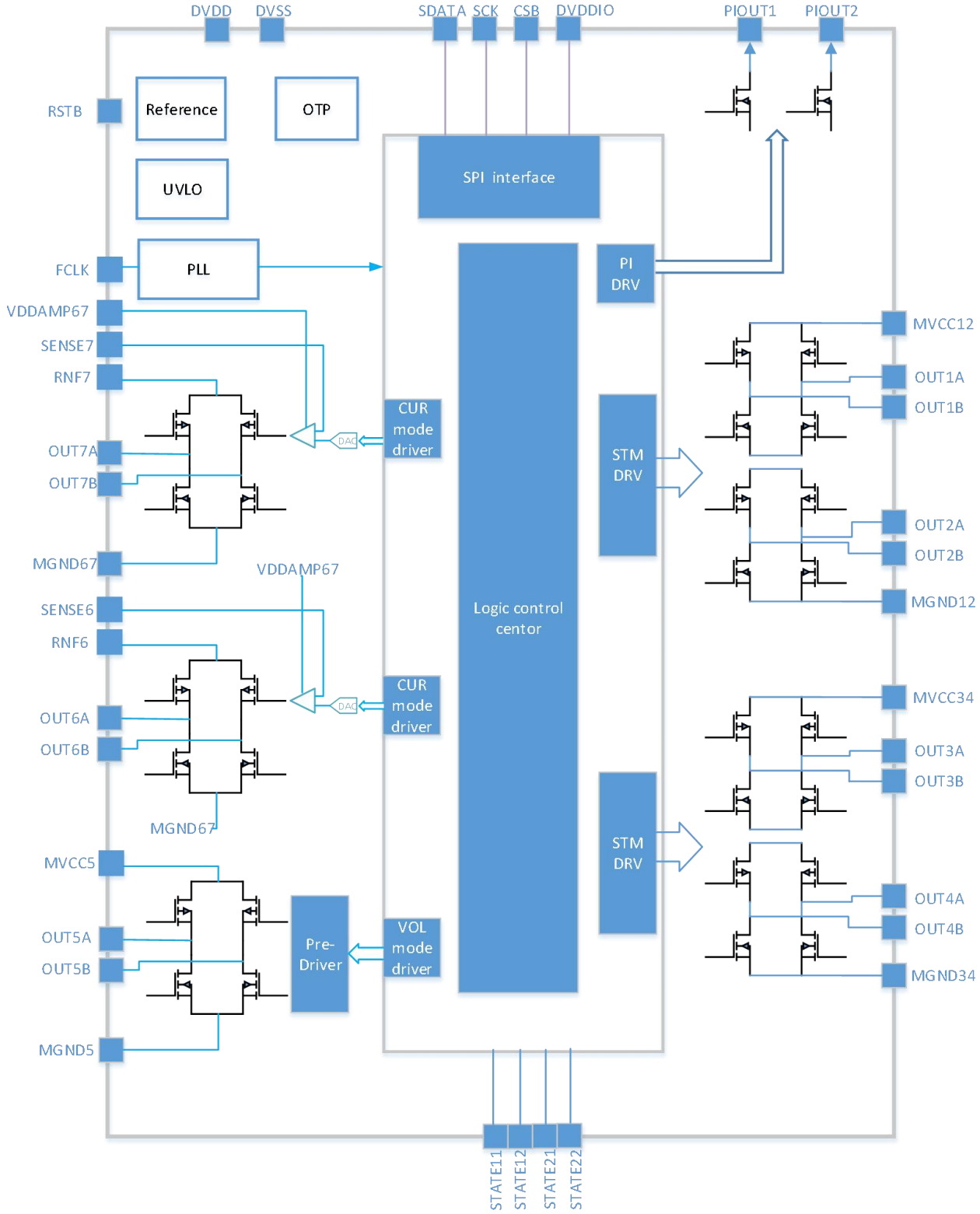

Absolute Maximum Ratings:

(over operating free-air temperature range (unless otherwise noted)

Symbol	Parameter	Rating	Unit
DVDD	Logic power supply range	-0.3~4.5	V
DVDDIO	IO power supply range	-0.3~4.5	V
MVCCxx	Motor power supply range	-0.3~7	V
VIN	Logic input voltage range	-0.3~DVDD+0.3	V
Irms	Max Rms current，OUTxx	±800	mA
IPI12	PIOUTx current	+50	mA
Tjmax	Operating virtual junction temperatures	-40~150	℃
Tstg	Storage Temperature	-60~150	℃
ESD	ESD（HBM）	±6000	V

Electrical Characteristics:

Recommended Operating Conditions

Parameter	Symbol	Test Conditions	Min.	Typ.	Max.	Unit
Motor power supply	MVCC		3.0		5.5	V
Logic power supply	DVDD		3.0		3.6	V
Logic IO supply	DVDDIO		1.6		3.6	V
Motor current	IOUT		0		0.5	A
Clock operating frequency	FCLK		1		28	MHz
Operating ambient temperature	Ta		-40		100	℃

Electrical Characteristics：(unless otherwise specified , T=25℃，DVDD=DVDDIO=3.3V，MVCCx=5V）

Parameter	Symbol	Test Conditions	Min.	Typ.	Max.	Unit
DVDD quiescence current	ISSD	CMD_RS=0		50	95	uA
MVCC quiescence current	ISSDM	CMD_RS=0		0	10	uA
DVDD operation current	ISSOD	CMD_RS=0		6	10	mA
OUT driver						
STM voltage driver 1ch~4ch						
Rdson,up+down	RdsON1	Io=100mA;1ch,2ch，3ch，4ch		1.3		Ω
When off leakage current	IOFF	Vout=0V	-10		10	uA
Average voltage accuracy	Vdiff	Vdiff setting:2Bh	-5		+5	%

between different output pins						
5ch ,voltage driver						
Rdson,up+down	R_{dsON3}	Io=100mA		1.25		Ω
When off leakage current	I_{OFF5}	Vout=0V	-10		10	uA
Average voltage accuracy between different output	Vdiff	Vdidff setting=010 1011	-5		+5	%
6ch，7ch ,current driver						
Rdson,up+down	R_{dsON3}	Io=100mA		1.25		Ω
When off leakage current	I_{OFF5}	Vout=0V	-10		10	uA
Output current	I_{out}	At current mode,DAC setting:80h,R_{RNF}=1Ω		200		mA
Logic input/output						
Input logic-low voltage falling threshold	V_{IL}		0		0.3* DVDDIO	V
Input logic-high voltage rising threshold	V_{IH}		0.7* DVDDIO		DVDDIO	V
Input logic low current	I_{IL}	Vin=0	0		10	uA
Input logic high current	I_{IH}	Vin=DVDDIO	0		10	uA
Output logic-low	V_{OL}	I=1mA	0		0.2* DVDDIO	V
Output logic-hign	V_{OH}	I=1mA	0.8* DVDDIO		DVDDIO	V
PI Driving circuit						
Output voltage	PI_{VO}	I=50mA		0.07	0.3	V

Function Description：

Stepping motor driver （1ch~4ch）

Built-in stepping motor driver of PWM driving type.
Maximum 2 stepping motors can be driven independently.
Built-in voltage feedback circuit of D-class type.
3ch/4ch drivers can also drive independently for DC motor or voice coil motor.

STM Control

(1) Autonomous Control

The stepping motor is rotated by setting the registers for the stepping motor control.
It is possible to select the mode of stepping motor control from μ -step (1024 portion), 1-2 phase excitation and 2 phase excitation.

Cache Method:

Built-in Cache registers. Cache registers enable the setting of subsequent process while the motor is in operation. Through these registers, operations are done continuously. The state of rotation command (ACT), state of Cache registers (BUSY), motor operation position (MO), and state of excitation (MO&EN) are synchronized with the motor rotation and can be selected to be the output of the STATE pin.

Voltage / Current Driver (5ch Driver)

Built-in voltage driver of PWM driving type / constant current driver.

Built-in digital FLL speed control logic for voltage driver.

(1) Control

(1)Register Control

Voltage Driver

The PWM drive is executed by the PWM duty ratio, the PWM direction and the PWM ON/OFF which are controlled by the register settings.

(2)External Pin Control

Voltage Driver

The PWM drive is executed by the PWM duty ratio which is controlled by the register setting. The PWM direction and PWM ON/OFF are controlled by IN5A/IN5B pin.

Current Driver (6ch, 7ch Driver)

Built-in constant current driver.

The voltage of RNF pin and the external resistor (R_{RNF}) determine the amount of output current. The internal high-precision amplifier (CMOS gate input) is used for the constant current control. If any resistance component exists in the wirings of RNF pin and the external resistor (R_{RNF}), the precision can be reduced. To avoid this, pay utmost attention to the wirings.

(1) Control

(a) Register Control

The constant current drive is executed by the output current value, the current direction and the current ON/OFF which are controlled by the register settings.

(b) External Pin Control

The constant current drive is executed by the output current value which is controlled by the register setting. Constant current driving direction and turning ON/OFF are controlled by IN6A/IN6B pins (IN7A/IN7B for ch7).

Serial interface

Control commands are framed by a 16-bit serial input (MSB first) and are sent through the CSB, SCLK, and SDATA pins. The 4 higher-order bits specify addresses, while the remaining 12 bits specify data. Data of every bit is sent through SDATA pin, which is retrieved during the rising edge of SCLK. Data becomes valid when CSB is Low and is registered during the rising edge of CSB.

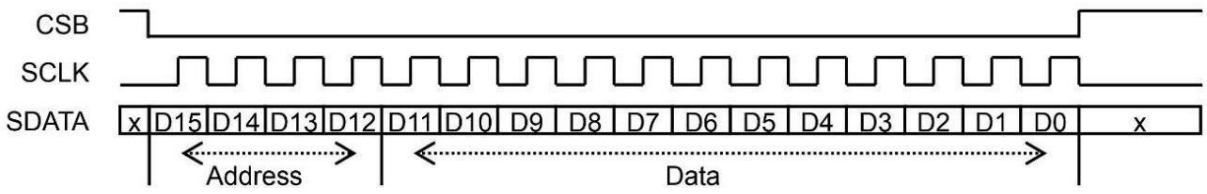

Register map

Address[3:0]				Data[11:0]											
15	14	13	12	11	10	9	8	7	6	5	4	3	2	1	0
0	0	0	0	ModeA[1:0]		SelA[1:0]		0	Ach_different_output_voltage[6:0]						
0	0	0	1	0	0	0	0	Ach_Cycle[7:0]							
				0	0	1	0	Ach_Cycle[15:8]							
				0	1	1	0	A_BEXC	0	0	A_BSL	A_AEXC	0	0	A_ASL
				1	1	1	0	0	0	APOS[1:0]		0	0	0	ASTOP
0	0	1	0	EnA	RtA	Ach_Pulse[9:0]									
0	0	1	1	0	0	0	0	0	0	0	0	0	0	0	0
0	1	0	0	0	0	0	0	0	0	0	0	0	0	0	0
0	1	0	1	0	0	0	0	0	0	0	0	0	0	0	0
0	1	1	0	0	0	0	0	0	0	0	0	0	0	0	0
0	1	1	1	0	0	0	0	0	0	0	0	0	0	0	0
1	0	0	0	ModeB[1:0]		SelB[1:0]		0	Bch_different_output_voltage[6:0]						
1	0	0	1	0	0	0	0	Bch_Cycle[7:0]							
				0	0	1	0	Bch_Cycle[15:8]							
				0	1	1	0	B_BEXC	0	0	B_BSL	B_AEXC	0	0	B_ASL
				1	0	0	0	0	0	3_Chop[1:0]		0	0	4_Chop[1:0]	
				1	0	1	3_PWM_Ct[1:0]		3ch_PWM_Duty[6:0]						
				1	1	0	4_PWM_Ct[1:0]		4ch_PWM_Duty[6:0]						
				1	1	1	0	0	0	BPOS[1:0]		0	0	0	BSTOP
1	0	1	0	EnB	RtB	Bch_Pulse[9:0]									
1	0	1	1	0	0	0	0	0	0	0	0	0	0	0	0
1	1	0	0	0	0	Chopping[1:0]		ChacheM	0	0	Isel	P_CTRL	CLK_DIV[2:0]		
1	1	0	1	0	0	0	0	0	0	0	0	0	0	PI_CTRL1	PI_CTRL2
				0	0	1	0	0	0	0	0	5_Sel[1:0]		5_Chop[1:0]	
				0	1	0	5_PWM_Ct[1:0]		5ch_PWM_Duty[6:0]						
1	1	1	0	0	0	0	0	Current driver reference voltage adjustment6 (DAC6 output value) [7:0]							
				0	1	0	0	7ch_S	0	7_PWM_Ct[1:0]		6ch_S	0	6_PWM_Ct[1:0]	
				1	0	0	0	Current driver reference voltage adjustment7 (DAC7 output value) [7:0]							
				1	1	0	0	0	0	0	0	0	0	0	CMD_RS
Addresses other than those above				Setting prohibited											

Typical Application

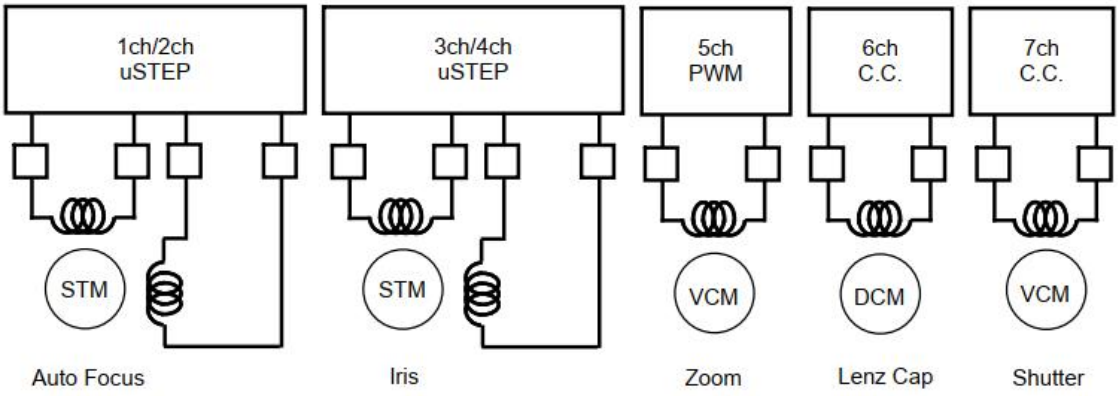

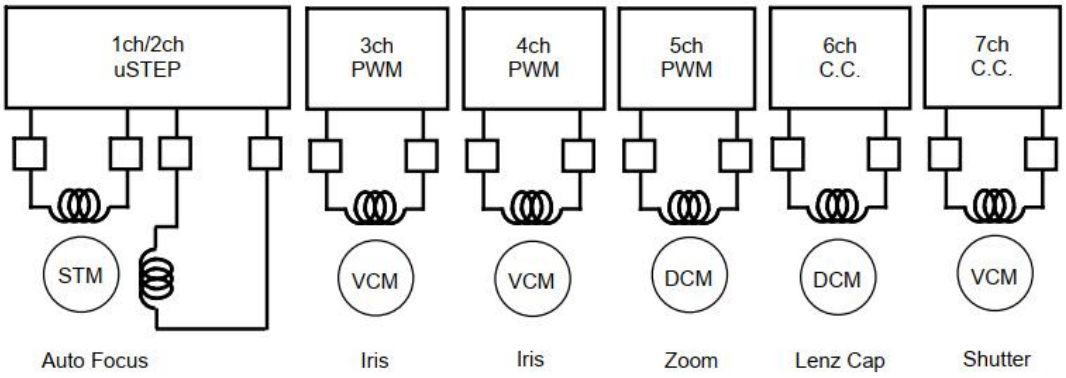

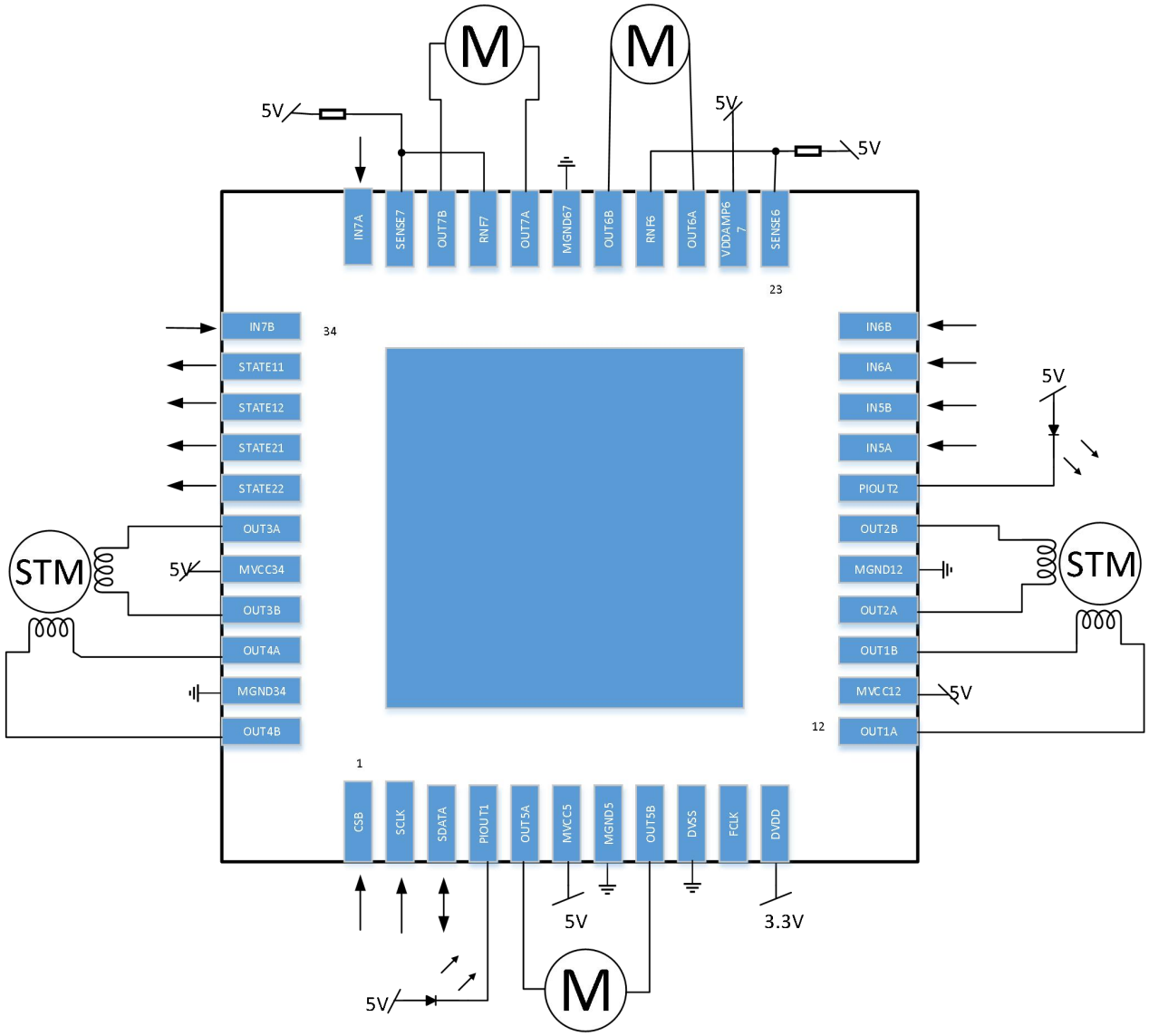

GC6125 application

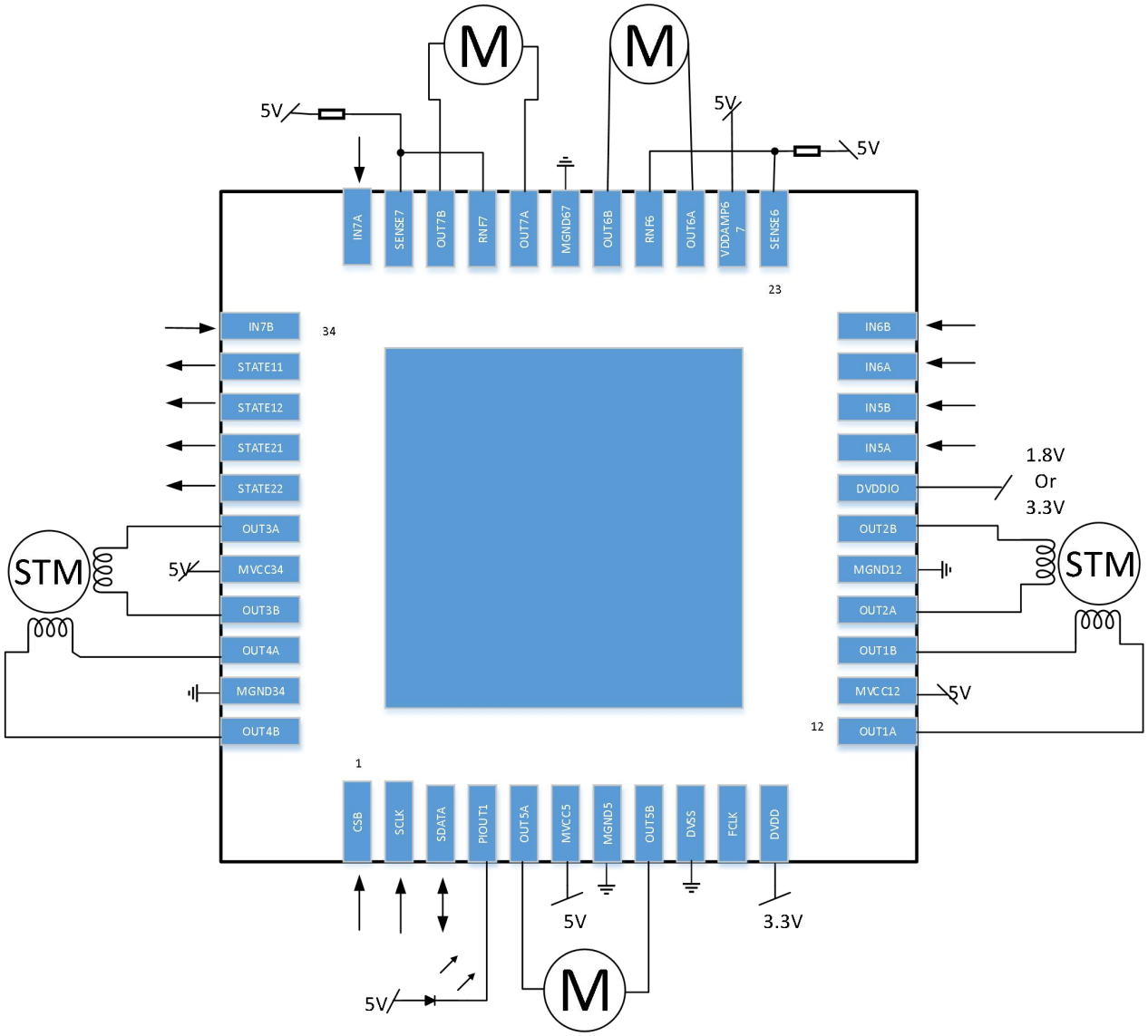

GC6125B application

Packaging Information

QFN44 **UNIT: mm**

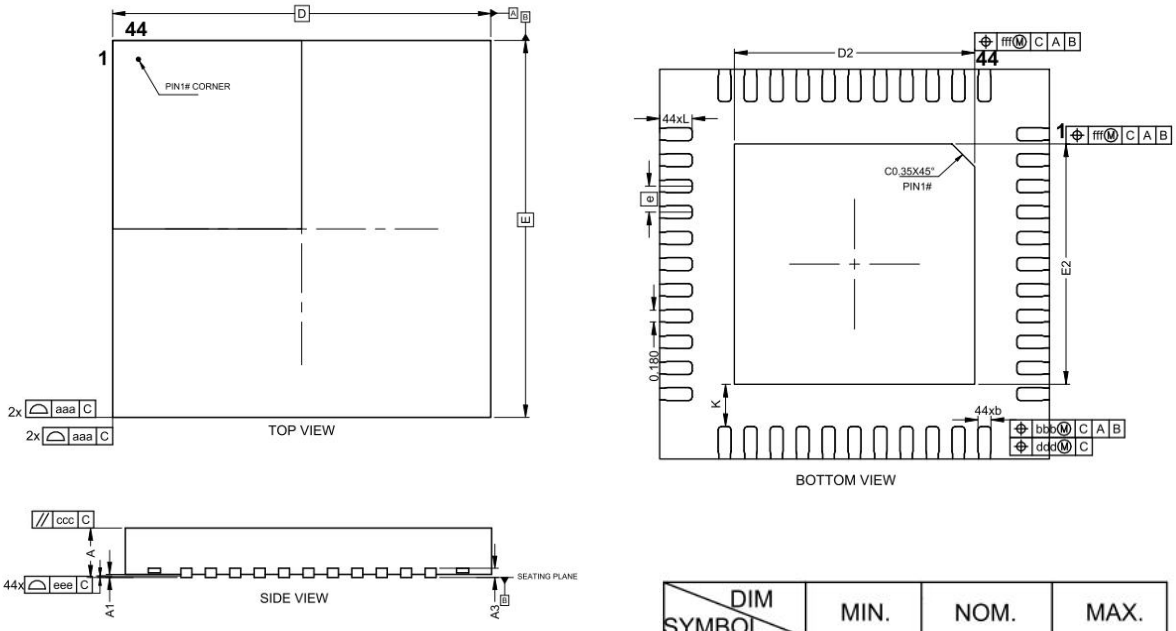

DIM / SYMBOL	MIN.	NOM.	MAX.
A	0.70	0.75	0.80
A1	0	0.02	0.05
A3	-	0.203REF	-
b	0.15	0.20	0.25
D		6.0BSC	
E		6.0BSC	
D2	3.65	3.70	3.75
E2	3.65	3.70	3.75
e		0.40SC	
L	0.45	0.50	0.55
K	-	0.65	-
aaa		0.15	
bbb		0.10	
ccc		0.10	
ddd		0.05	
eee		0.08	
fff		0.10	

Packaging Introduction for GC6125

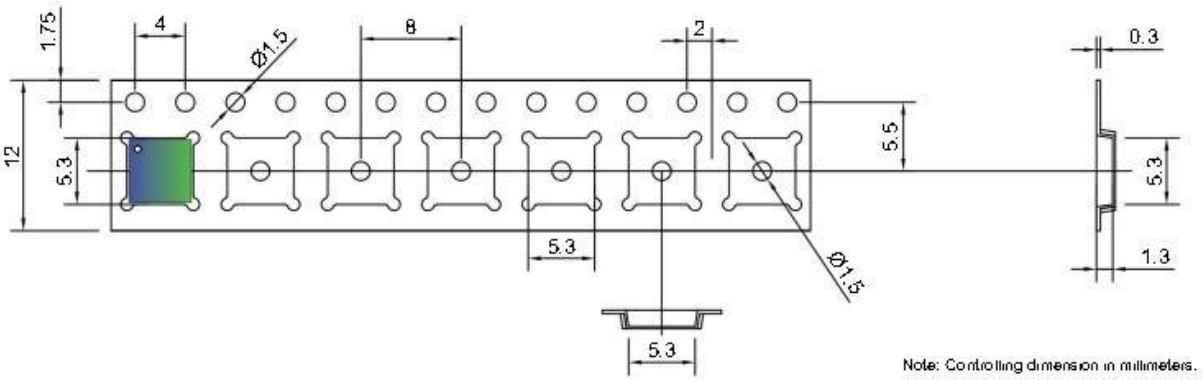

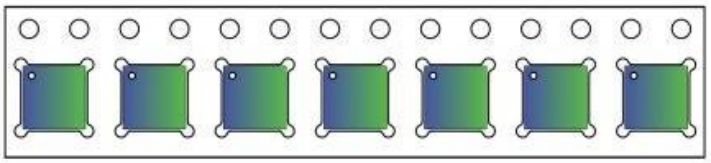

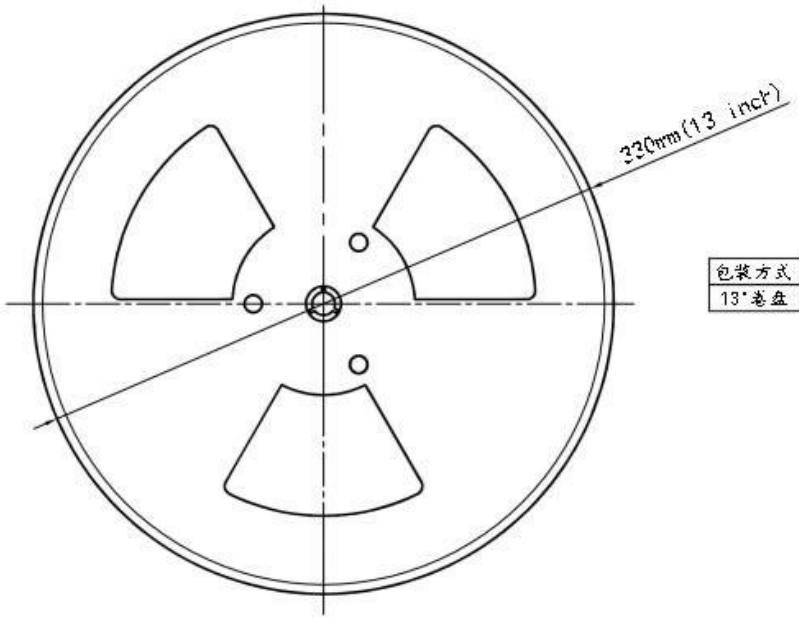

包装方式	封装形式	每盘数量	内盒盘数	装箱盒数	外箱总数
13"卷盘	QFN5*5	4000PCS	2	8	64000PCS

Description of Lot Code

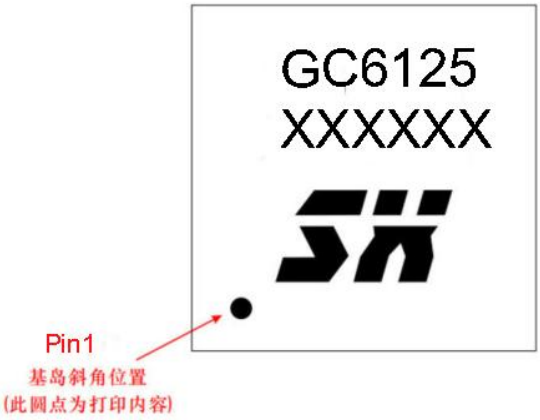

Printing instructions：

1. The first line GC6125 represents the product model
2. The second line represents the trace ability code

Release Notes

Revision	Description
1.0	Initial version
1.1	Corrected ambiguity in some descriptions ;
1.2	Added packaging instructions to enhance the clarity of packaging drawings；
1.3	Change logo and some parameter