RoHS Compliant 2011/65/EU

NOTES:

1.HUOSING: LCP HIGH-TEMP THERMOPLASTIC UL94V-0 COLOR:NATURE

2.ACTUATOR: LCP HIGH-TEMP THERMOPLASTIC UL94V-0 COLOR:BLACK

3.TERMINAL: COPPER ALLOY

PLATING:3μ"GOLD FOR CONTACT AREA AND SOLDER AREA
OVERALL 50~100μ"NICKEL UNDER PLATED.

4.FITTING NAIL: COPPER ALLOY

PLATING:100~150μ"TIN(LEAD FREE)
OVERALL 50~100μ"NICKEL UNDER PLATED.

5.SPECIFICATION:

CURRENT RATING: 0.5A 50V AC/DC

CONTACT RESISTANCE: 30mΩ MAX

INSULATION RESISTANCE: 500MΩ AT 250V DC

OPERATING TEMPERATURE RANGE: -25°C~85°C

WITHSTANDING VOLTANG: 250V AC/minute

6.CODING INFORMATION: THD05136-xxCL-G3

- G3: 3μ"GOLD PLATING
- xx: NO. OF CONTACTS
- 0.5PITCH 1.5H R/A SMT Connector
- THD05136: CONNECTOR SERIES

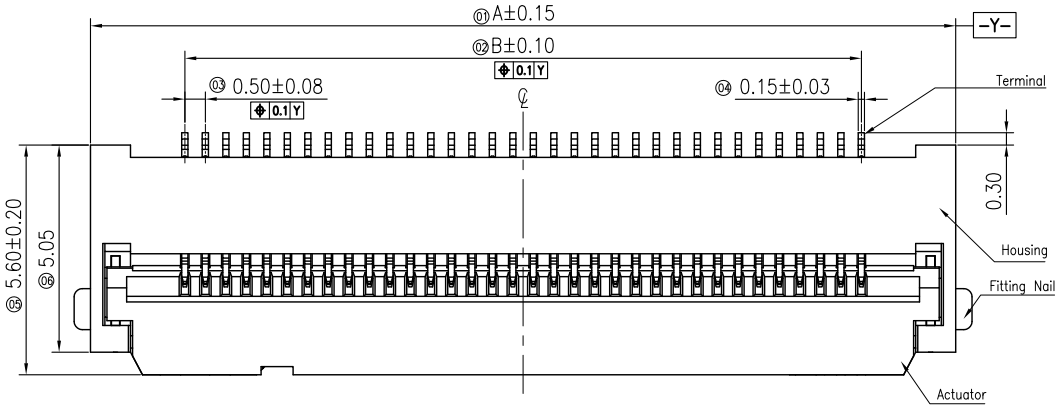


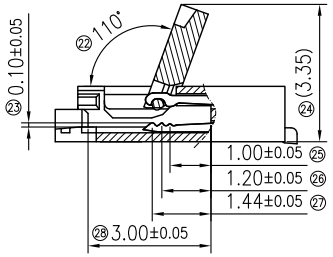


CABLE INSERT DIM.

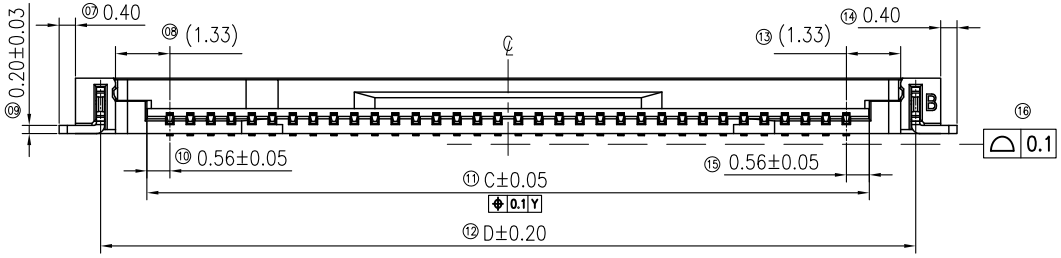


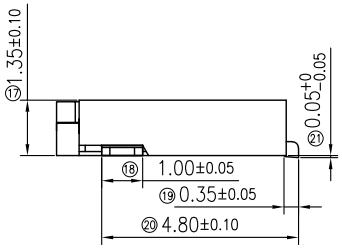


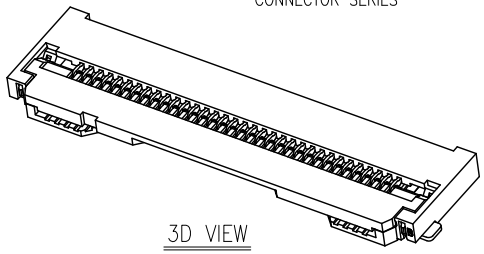

3D VIEW

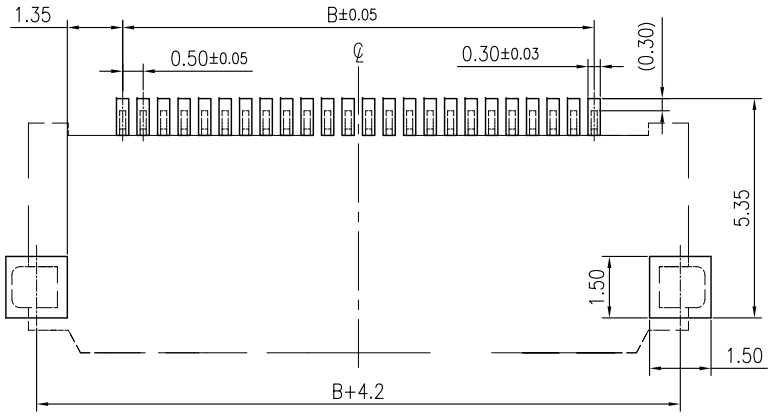


RECOMMENDED PCB PATTERN DIM.

TOLERANCE : ±0.05

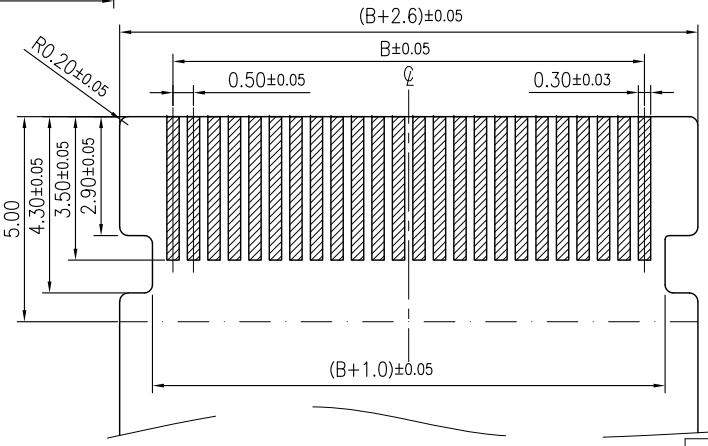


APPLICABLE FPC/FFC

FFC THICKNESS=0.30$^{+0.03}_{-0.01}$

| NO.of contacts | Dimensions A. | B. | C. | D. | NO.of contacts | Dimensions A. | B. | C. | D. |
|---|---|---|---|---|---|---|---|---|---|
| 4 | 6.10 | 1.50 | 2.62 | 4.88 | 23 | 15.60 | 11.00 | 12.12 | 14.38 |
| 5 | 6.60 | 2.00 | 3.12 | 5.38 | 24 | 16.10 | 11.50 | 12.62 | 14.88 |
| 6 | 7.10 | 2.50 | 3.62 | 5.88 | 25 | 16.60 | 12.00 | 13.12 | 15.38 |
| 7 | 7.60 | 3.00 | 4.12 | 6.38 | 26 | 17.10 | 12.50 | 13.62 | 15.88 |
| 8 | 8.10 | 3.50 | 4.62 | 6.88 | 27 | 17.60 | 13.00 | 14.12 | 16.38 |
| 9 | 8.60 | 4.00 | 5.12 | 7.38 | 28 | 18.10 | 13.50 | 14.62 | 16.88 |
| 10 | 9.10 | 4.50 | 5.62 | 7.88 | 29 | 18.60 | 14.00 | 15.12 | 17.38 |
| 11 | 9.60 | 5.00 | 6.12 | 8.38 | 30 | 19.10 | 14.50 | 15.62 | 17.88 |
| 12 | 10.10 | 5.50 | 6.62 | 8.88 | 31 | 19.60 | 15.00 | 16.12 | 18.38 |
| 13 | 10.60 | 6.00 | 7.12 | 9.38 | 32 | 20.10 | 15.50 | 16.62 | 18.88 |
| 14 | 11.10 | 6.50 | 7.62 | 9.88 | 33 | 20.60 | 16.00 | 17.12 | 19.38 |
| 15 | 11.60 | 7.00 | 8.12 | 10.38 | 34 | 21.10 | 16.50 | 17.62 | 19.88 |
| 16 | 12.10 | 7.50 | 8.62 | 10.88 | 35 | 21.60 | 17.00 | 18.12 | 20.38 |
| 17 | 12.60 | 8.00 | 9.12 | 11.38 | 36 | 22.10 | 17.50 | 18.62 | 20.88 |
| 18 | 13.10 | 8.50 | 9.62 | 11.88 | 37 | 22.60 | 18.00 | 19.12 | 21.38 |
| 19 | 13.60 | 9.00 | 10.12 | 12.38 | 38 | 23.10 | 18.50 | 19.62 | 21.88 |
| 20 | 14.10 | 9.50 | 10.62 | 12.88 | 39 | 23.60 | 19.00 | 20.12 | 22.38 |
| 21 | 14.60 | 10.00 | 11.12 | 13.38 | 40 | 24.10 | 19.50 | 20.62 | 22.88 |
| 22 | 15.10 | 10.50 | 11.62 | 13.88 | 41 | 24.60 | 20.00 | 21.12 | 23.38 |

| REV. | REVISIONS | CHK | DATE |
|---|---|---|---|
| | | | |

CUSTOMER

惠州新宝华科技有限公司
Huizhou New Baohua Technology Co., LTD

GENERAL TOLERANCE UNLESS OTHERWISE SPECIFIED

| | |
|---|---|
| X.X | ±0.25 |
| X.XX | ±0.20 |
| X.XXX | ±0.15 |
| ANG. | ±2° |

DRAWN: Gary 2025.04.07
CHECKED: Kavin 2025.04.07
APPROVED: 2025.04.07

PART NO. THD05136-xxCL-G3

TITLE: 0.5PITCH 1.35H FPC LOWER CONTACT R/A SMT CONN. (narrow version)

SHEET: 1/2 | UNIT: mm | SCALE: 1:1 | SIZE: A4 | REV: A

RoHS Compliant 2011/65/EU

## Tape width 16 and 24 mm

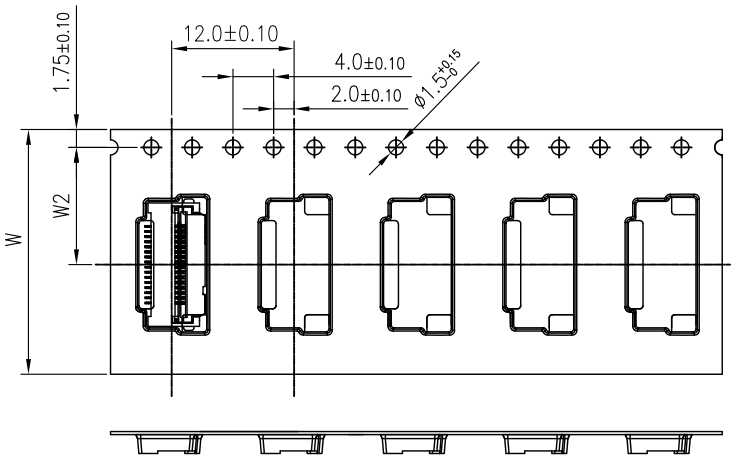


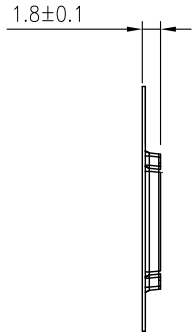


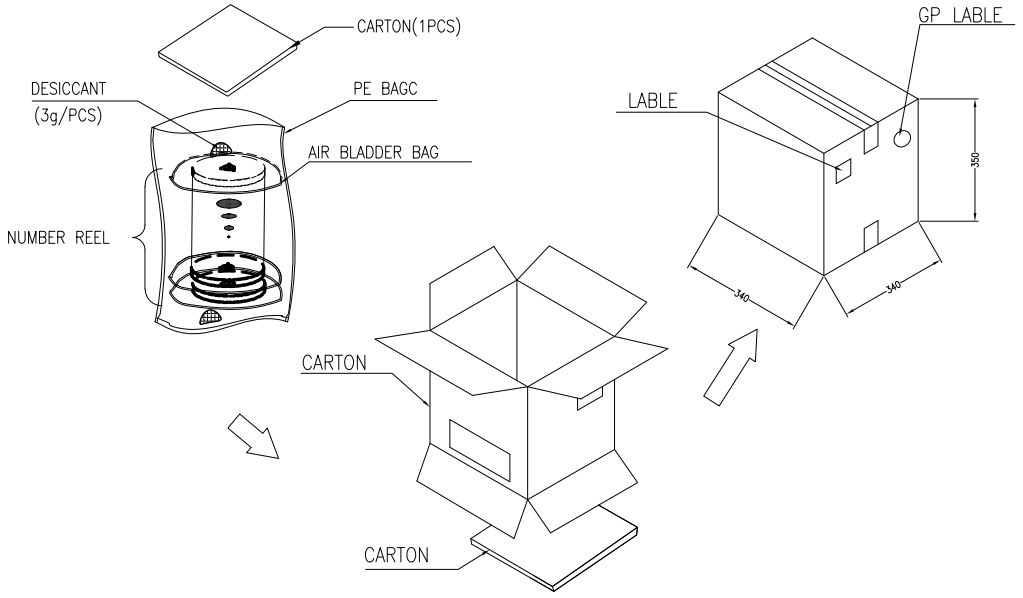


## Tape width 32 and 56 mm

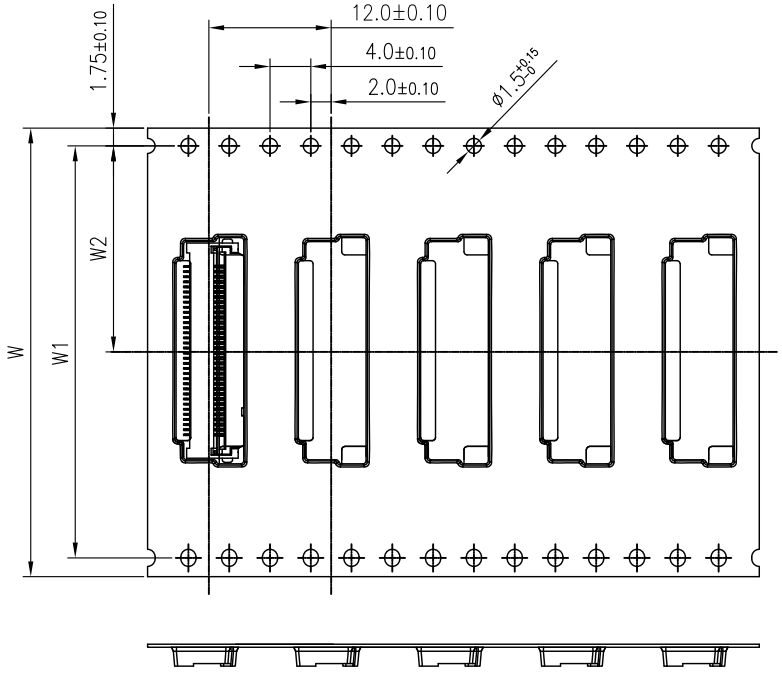


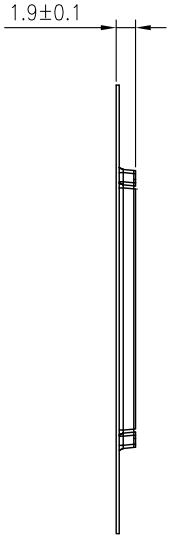


NOTES:

1. Component load per 13" reel:3000 pcs
2. Material: white conductive polystyrene alloy.
3. Thickness:0.3±0.05mm
4. All dimensions meet EIA-481-C requirements

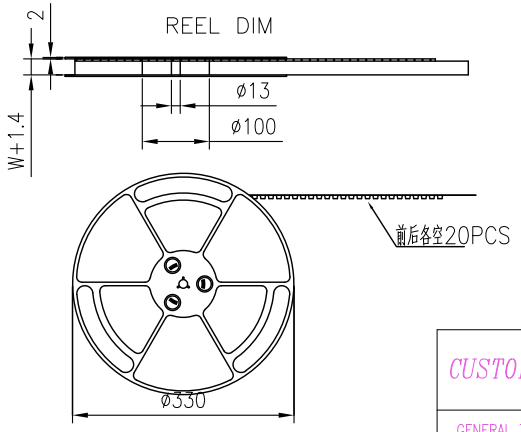


| No.of Contacts | DIM | | | REEL (CARTON) | SUM(PCS) |
|---|---|---|---|---|---|
| | W | W1 | W2 | | |
| THD05136 4pin~7pin | 16 | / | 7.5 | 15 | 45000 |
| THD05136 8pin~23pin | 24 | | 11.5 | 12 | 36000 |
| THD05136 24pin~32pin | 32 | 28.4 | 14.2 | 10 | 30000 |
| THD05136 33pin~56pin | 44 | 40.4 | 20.2 | 6 | 18000 |
| THD05136 57pin~61pin | 56 | 52.4 | 26.2 | 5 | 15000 |

| REV. | REVISIONS | CHK | DATE |
|---|---|---|---|
| | | | |

CUSTOMER

惠州新宝华科技有限公司
Huizhou New Baohua Technology Co., LTD

GENERAL TOLERANCE UNLESS OTHERWISE SPECIFIED

| | |
|---|---|
| X.X | ±0.25 |
| X.XX | ±0.20 |
| X.XXX | ±0.10 |
| ANG. | ±3° |

DRAWN: Gary 2019.08.13
CHECKED: Kavin 2019.08.13
APPROVED: JTM 2019.08.13

PART NO. THD05136-xxCL-G3

TITLE: 0.5PITCH 1.35H FPC LOWER CONTACT R/A SMT CONN.

| SHEET: | UNIT: | SCALE: | SIZE: | REV: |
|---|---|---|---|---|
| 1/1 | mm | 1:1 | A4 | A |