Description

This single buffer is designed for 1.65V to 5.5V V_{CC} operation.

The MC74VHC1G126 device is a single line driver with 3-state output. The output is disabled when the output-enable input is low.To ensure the high-impedance state during power up or power down, OE should be tied to GND through a pulldown resistor, the minimum value of the resistor is determined by the current-sourcing capability of the driver.The MC74VHC1G126 is available in Green SOT23-5 and SOT-353 packages. It operates over an ambient temperature range of -40°C to +125°C.

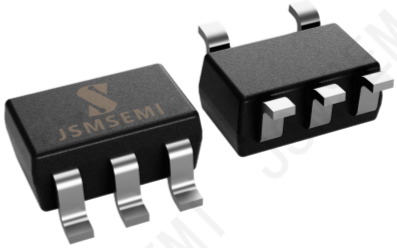

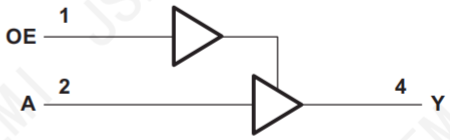

Simplified Schematic

Features

- Packages: SOT23-5, SOT-353(SC70-5)
- Supports 5V V_{CC} Operation
- Inputs Accept Voltages to 5.5 V
- Provides Down Translation to V_{CC}
- Typ t_{pd} of 3.9ns at 3.3 V
- Low Power Consumption, 1μA Max I_{CC}
- ±24mA Output Drive at 3V
- I_{off} Supports Live Insertion, Partial-Power-Down Mode, and Back Drive Protection
- Latch-Up Performance Exceeds 100 mA
- ESD Protection Exceeds JESD 22
  - 2000V Human-Body Model
  - 200V Machine Model
  - 1000V Charged-Device Model
- Operating Temperature Range: -40°C to +125°C
- RoSH compatible

Applications

- Cable Modem Termination Systems
- High-Speed Data Acquisition and Generation
- Military: Radars and Sonars
- Motor Controls: High-Voltage
- Power Line Communication Modems
- SSDs: Internal or External
- Video Broadcasting and Infrastructure: Scalable Platforms
- Video Broadcasting: IP-Based Multi-Format Transcoders
- Video Communication Systems

Ordering Information

Order number	Package	Marking	Operation Temperature Range	MSL Grade	Ship,Quantity	Green
MC74VHC1G126DBVT1G-JSM	SOT-23-5L	C265	-40 to 125°C	3	TR&3000	Rohs
MC74VHC1G126DFT1G-JSM	SOT-353	CNK	-40 to 125°C	3	TR&3000	Rohs

Pin Configuration and Functions

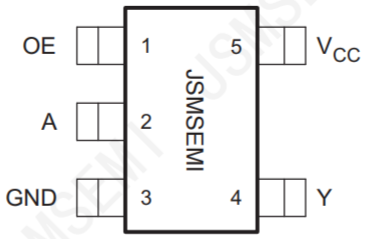

(TOP VIEW)

Pin Functions

PIN		TYPE	DESCRIPTION
NAME	MC74VHC1G126 SOT23-5 SOT-353		
OE	1	I	OE Enable/Input
A	2	I	A Input
GND	3	—	Ground Pin
Y	4	O	Y Output
V_{CC}	5	—	Power Pin

Specifications

Absolute Maximum Ratings

over operating free-air temperature range (unless otherwise noted)(1)

			MIN	MAX	UNIT
V_{CC}	Supply voltage range		–0.5	6.5	V
V_I	Input voltage range(2)		–0.5	6.5	V
V_O	Voltage range applied to any output in the high-impedance or power-off state(2)		–0.5	6.5	V
V_O	Voltage range applied to any output in the high or low state(2)(3)		–0.5	V_{CC} + 0.5	V
I_{IK}	Input clamp current	V_I < 0		–50	mA
I_{OK}	Output clamp current	V_O < 0		–50	mA
I_O	Continuous output current			±50	mA
	Continuous current through V_{CC} or GND			±100	mA
T_{stg}	Storage temperature range		–65	150	°C

(1) Stresses beyond those listed under Absolute Maximum Ratings may cause permanent damage to the device. These are stress ratings only, and functional operation of the device at these or any other conditions beyond those indicated under Recommended Operating Conditions is not implied. Exposure to absolute-maximum-rated conditions for extended periods may affect device reliability.
(2) The input negative-voltage and output voltage ratings may be exceeded if the input and output current ratings are observed.
(3) The value of V_{CC} is provided in the Recommended Operating Conditions table.

ESD Ratings

PARAMETER		DEFINITION	VALUE	UNIT
$V_{(ESD)}$	Electrostatic discharge	Human body model (HBM)	2000	V
		Charged device model (CDM)	1000	

Recommended Operating Conditions

over operating free-air temperature range (unless otherwise noted)(1)

			MIN	MAX	UNIT
V_{CC}	Supply voltage	Operating	1.65	5.5	V
		Data retention only	1.5		
V_{IH}	High-level input voltage	V_{CC} = 1.65 V to 1.95 V	0.65 × V_{CC}		V
		V_{CC} = 2.3 V to 2.7 V	1.7		
		V_{CC} = 3 V to 3.6 V	2		
		V_{CC} = 4.5 V to 5.5 V	0.7 × V_{CC}		
V_{IL}	Low-level input voltage	V_{CC} = 1.65 V to 1.95 V		0.15 × V_{CC}	V
		V_{CC} = 2.3 V to 2.7 V		0.7	
		V_{CC} = 3 V to 3.6 V		0.8	
		V_{CC} = 4.5 V to 5.5 V		0.15 × V_{CC}	
V_I	Input voltage		0	5.5	V
V_O	Output voltage		0	V_{CC}	V
I_{OH}	High-level output current	V_{CC} = 1.65 V		–4	mA
		V_{CC} = 2.3 V		–8	
		V_{CC} = 3 V		–16	
				–24	
		V_{CC} = 4.5 V		–32	
I_{OL}	Low-level output current	V_{CC} = 1.65 V		4	mA
		V_{CC} = 2.3 V		8	
		V_{CC} = 3 V		16	
				24	
		V_{CC} = 4.5 V		32	
Δt/Δv	Input transition rise or fall rate	V_{CC} = 1.8 V ± 0.15 V, 2.5 V ± 0.2 V		20	ns/V
		V_{CC} = 3.3 V ± 0.3 V		10	
		V_{CC} = 5 V ± 0.5 V		5	
T_A	Operating free-air temperature		–40	125	°C

(1) All unused inputs of the device must be held at V_{CC} or GND to ensure proper device operation.

Thermal Information

THERMAL METRIC		MC74VHC1G126		UNIT
		SOT23	SOT353	
		5 PINS	5 PINS	
$R_{\theta JA}$	Junction-to-ambient thermal resistance	206	252	°C/W

Electrical Characteristics

over recommended operating free-air temperature range (TYP values are at T_A = +25°C, unless otherwise noted.) (1)

PARAMETER		TEST CONDITIONS	V_{CC}	TEMP	MIN	TYP	MAX	UNIT
V_{OH}		I_{OH} = -100μA	1.65V to 5.5V	Full	V_{CC}-0.1			V
		I_{OH} = -4mA	1.65V		1.2			
		I_{OH} = -8mA	2.3V		1.9			
		I_{OH} = -16mA	3V		2.4			
		I_{OH} = -24mA			2.3			
		I_{OH} = -32mA	4.5V		3.8			
V_{OL}		I_{OL} = 100μA	1.65V to 5.5V	Full			0.1	V
		I_{OL} = 4mA	1.65V				0.45	
		I_{OL} = 8mA	2.3V				0.3	
		I_{OL} = 16mA	3V				0.4	
		I_{OL} = 24mA					0.55	
		I_{OL} = 32mA	4.5V				0.55	
I_I	A or OE inputs	V_I=5.5V or GND	0V to 5.5V	+25°C		±0.1	±1	μA
				Full			±5	
I_{off}		V_I or V_O=5.5V	0V	+25°C		±0.1	±1	μA
				Full			±10	
I_{OZ}		V_O=0V to 5.5V	3.6V	Full			10	μA
I_{CC}		V_I=5.5V or GND, I_O=0	1.65V to 5.5V	+25°C		0.1	1	μA
				Full			10	
ΔI_{CC}		One input at V_{CC}-0.6V, Other inputs at V_{CC} or GND	3V to 5.5V	Full			500	μA

Switching Characteristics, –40°C to 125°C

over recommended operating free-air temperature range, C_L = 15 pF (unless otherwise noted) (see Figure 3)

PARAMETER	FROM (INPUT)	TO (OUTPUT)	V_{CC}=1.8V±0.15V	V_{CC}=2.5V±0.2V	V_{CC}=3.3V±0.3V	V_{CC}=5V±0.5V	UNIT
			TYP	TYP	TYP	TYP	
t_{pd}	A	Y	6.1	3.7	3.9	2.1	ns

Switching Characteristics, –40°C to 125°C

over recommended operating free-air temperature range, C_L = 30 pF or 50 pF (unless otherwise noted) (see Figure 4)

PARAMETER	FROM (INPUT)	TO (OUTPUT)	V_{CC}=1.8V±0.15V	V_{CC}=2.5V±0.2V	V_{CC}=3.3V±0.3V	V_{CC}=5V±0.5V	UNIT
			TYP	TYP	TYP	TYP	
t_{pd}	A	Y	8.6	5.3	4.0	2.9	ns
t_{en}	OE	Y	9.5	5.8	5.0	3.3	ns
t_{dis}	OE	Y	7.4	4.3	4.4	3.0	ns

Operating Characteristics

T_A = 25°C

PARAMETER			TEST CONDITIONS	V_{CC}=1.8V	V_{CC}=2.5V	V_{CC}=3.3V	V_{CC}=5V	UNIT
				TYP	TYP	TYP	TYP	
C_{pd}	Power dissipation capacitance	Output enabled	f=10MHz	18	18	19	21	pF
		Output disabled		2	2	2	4	

(1) All unused inputs of the device must be held at V_{CC} or GND to ensure proper device operation.

Parameter Measurement Information

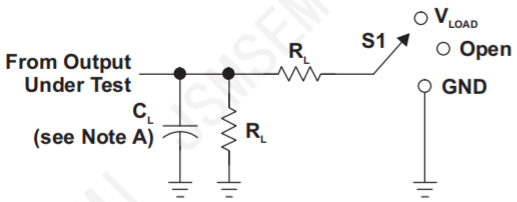

LOAD CIRCUIT

TEST	S1
t_{PLH}/t_{PHL}	Open
t_{PLZ}/t_{PZL}	V_{LOAD}
t_{PHZ}/t_{PZH}	GND

V_{CC}	INPUTS		V_M	V_{LOAD}	C_L		R_L		V_Δ
	V_I	t_r/t_f							
1.8V±0.15V	V_{CC}	≤2ns	$V_{CC}/2$	2 x V_{CC}	15pF	30pF	1MΩ	1kΩ	0.15V
2.5V±0.2V	V_{CC}	≤2ns	$V_{CC}/2$	2 x V_{CC}	15pF	30pF	1MΩ	500Ω	0.15V
3.3V±0.3V	3V	≤2.5ns	1.5V	6V	15pF	50pF	1MΩ	500Ω	0.3V
5V±0.5V	V_{CC}	≤2.5ns	$V_{CC}/2$	2 x V_{CC}	15pF	50pF	1MΩ	500Ω	0.3V

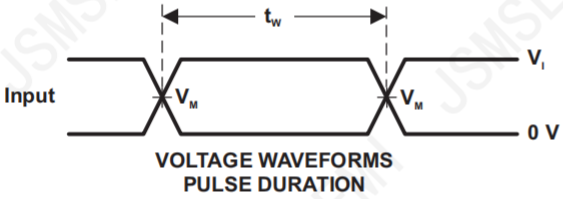

VOLTAGE WAVEFORMS
PULSE DURATION

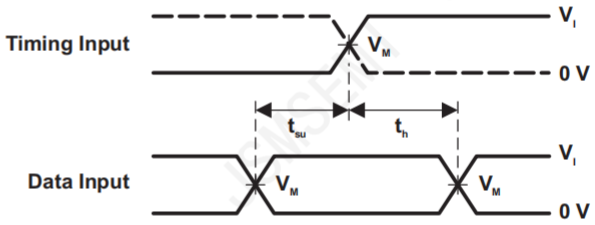

VOLTAGE WAVEFORMS
SETUP AND HOLD TIMES

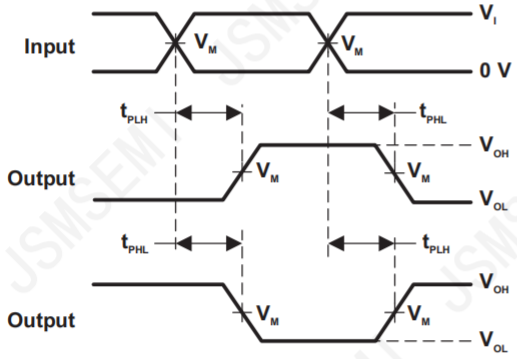

VOLTAGE WAVEFORMS
PROPAGATION DELAY TIMES
INVERTING AND NONINVERTING OUTPUTS

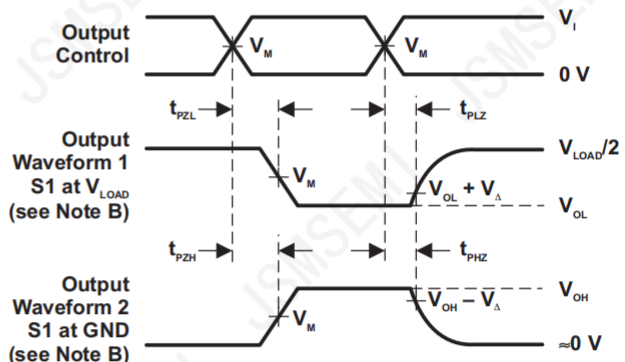

VOLTAGE WAVEFORMS
ENABLE AND DISABLE TIMES
LOW- AND HIGH-LEVEL ENABLING

NOTES:
A. C_L includes probe and jig capacitance.
B. Waveform 1 is for an output with internal conditions such that the output is low, except when disabled by the output control. Waveform 2 is for an output with internal conditions such that the output is high, except when disabled by the output control.
C. All input pulses are supplied by generators having the following characteristics: PRR ≤ 10 MHz, Z_O = 50 Ω.
D. The outputs are measured one at a time, with one transition per measurement.
E. t_{PLZ} and t_{PHZ} are the same as t_{dis}.
F. t_{PZL} and t_{PZH} are the same as t_{en}.
G. t_{PLH} and t_{PHL} are the same as t_{pd}.
H. All parameters and waveforms are not applicable to all devices.

Figure 1. Load Circuit and Voltage Waveforms

Detailed Description

Overview

The MC74VHC1G126 device contains a dual buffer gate with output enable control and performs the Boolean function Y = A.

This device is fully specified for partial-power-down applications using I_{off}. The I_{off} circuitry disables the outputs, preventing damaging current backflow through the device when it is powered down.

To ensure the high-impedance state during power up or power down, OE should be tied to GND through a pull-down resistor; the minimum value of the resistor is determined by the current-sourcing capability of the driver.

Functional Block Diagram

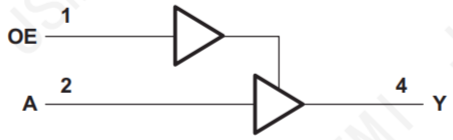

Feature Description

- 1.65 V to 5.5 V operating voltage range
- Allows down voltage translation
  - 5 V to 3.3 V
  - 5 V or 3.3 V to 1.8 V
- Inputs accept voltages to 5.5 V
  - 5.5-V tolerance on input pin when V_{CC} = 0 V
- I_{off} feature
  - Allows voltage on the inputs and outputs when V_{CC} is 0 V
  - Able to reduce leakage when V_{CC} is 0 V

Device Functional Modes

Table 1. Function Table

INPUTS		OUTPUT
OE	A	Y
H	H	H
H	L	L
L	X	Z

Application Information

The MC74VHC1G126 device is a high-drive CMOS device that can be used as an output enabled buffer with a high output drive, such as an LED application. It can produce 24 mA of drive current at 3.3 V, making it ideal for driving multiple outputs and good for high speed applications up to 100 MHz. The inputs are 5.5-V tolerant allowing it to translate down to V_{CC}.

Typical Application

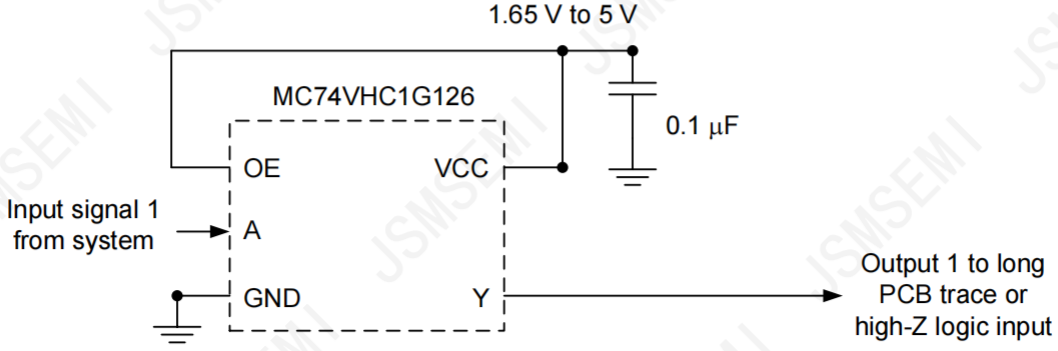

Figure 2. Application Schematic

Power Supply Recommendations

The power supply can be any voltage between the MIN and MAX supply voltage rating located in the Recommended Operating Conditions table.

Each V_{CC} terminal should have a good bypass capacitor to prevent power disturbance. For devices with a single supply, a 0.1-μF capacitor is recommended. If there are multiple V_{CC} terminals, then 0.01-μF or 0.022-μF capacitors are recommended for each power terminal. It is ok to parallel multiple bypass capacitors to reject different frequencies of noise. Multiple bypass capacitors may be paralleled to reject different frequencies of noise. The bypass capacitor should be installed as close to the power terminal as possible for the best results.

Layout

Layout Guidelines

When using multiple bit logic devices, inputs should not float. In many cases, functions or parts of functions of digital logic devices are unused. Some examples are when only two inputs of a triple-input AND gate are used, or when only 3 of the 4-buffer gates are used. Such input pins should not be left unconnected because the undefined voltages at the outside connections result in undefined operational states.

Specified in Figure 3 are rules that must be observed under all circumstances. All unused inputs of digital logic devices must be connected to a high or low bias to prevent them from floating. The logic level that should be applied to any particular unused input depends on the function of the device. Generally they will be tied to GND or V_{CC}, whichever makes more sense or is more convenient. It is acceptable to float outputs unless the part is a transceiver. If the transceiver has an output enable pin, it will disable the outputs section of the part when asserted. This will not disable the input section of the I/Os so they also cannot float when disabled.

Layout Example

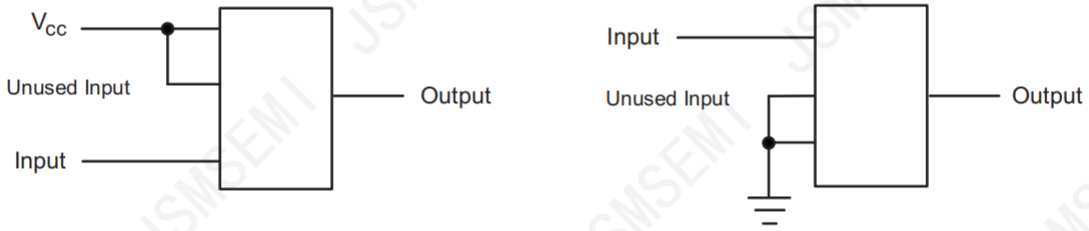

Figure 3. Layout Diagram

Package Information

SOT-23-5L

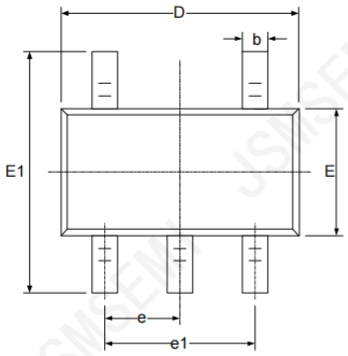

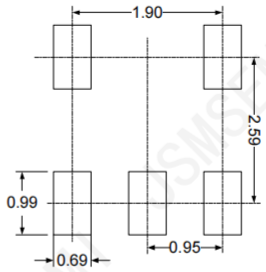

RECOMMENDED LAND PATTERN (Unit: mm)

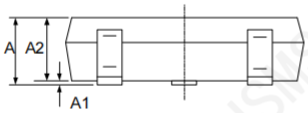

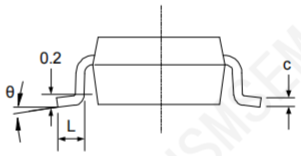

Symbol	Dimensions In Millimeters		Dimensions In Inches	
	Min	Max	Min	Max
A	1.050	1.250	0.041	0.049
A1	0.000	0.100	0.000	0.004
A2	1.050	1.150	0.041	0.045
b	0.300	0.500	0.012	0.020
c	0.100	0.200	0.004	0.008
D	2.820	3.020	0.111	0.119
E	1.500	1.700	0.059	0.067
E1	2.650	2.950	0.104	0.116
e	0.950(BSC)		0.037(BSC)	
e1	1.800	2.000	0.071	0.079
L	0.300	0.600	0.012	0.024
θ	0°	8°	0°	8°

Package Information

SOT-353(SC70-5)

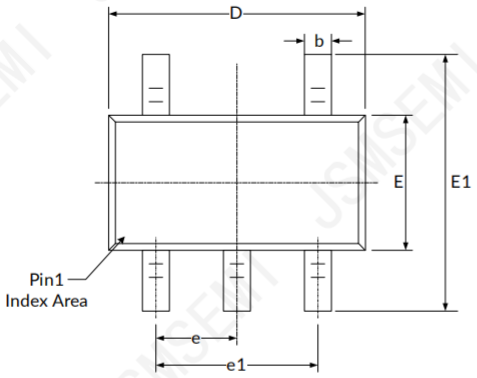

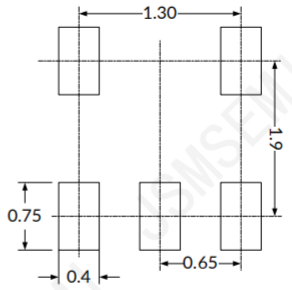

RECOMMENDED LAND PATTERN (Unit: mm)

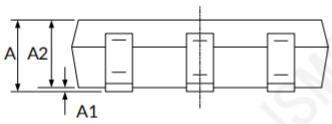

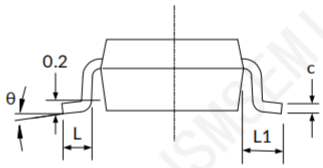

Symbol	Dimensions In Millimeters		Dimensions In Inches	
	Min	Max	Min	Max
A	0.900	1.100	0.035	0.043
A1	0.000	0.100	0.000	0.004
A2	0.900	1.000	0.035	0.039
b	0.150	0.350	0.006	0.014
c	0.080	0.150	0.003	0.006
D (1)	2.000	2.200	0.079	0.087
E (1)	1.150	1.350	0.045	0.053
E1	2.150	2.450	0.085	0.096
e	0.650(BSC)		0.026(BSC)	
e1	1.300(BSC)		0.051(BSC)	
L	0.260	0.460	0.010	0.018
L1	0.525		0.021	
θ	0°	8°	0°	8°

Revision History

Rev.	Change	Date
V1.0	Initial version	6/27/2021

Important Notice

JSMSEMI Semiconductor (JSMSEMI) PRODUCTS ARE NEITHER DESIGNED NOR INTENDED FOR USE IN MILITARY AND/OR AEROSPACE, AUTOMOTIVE OR MEDICAL DEVICES OR SYSTEMS UNLESS THE SPECIFIC JSMSEMI PRODUCTS ARE SPECIFICALLY DESIGNATED BY JSMSEMI FOR SUCH USE. BUYERS ACKNOWLEDGE AND AGREE THAT ANY SUCH USE OF JSMSEMI PRODUCTS WHICH JSMSEMI HAS NOT DESIGNATED FOR USE IN MILITARY AND/OR AEROSPACE, AUTOMOTIVE OR MEDICAL DEVICES OR SYSTEMS IS SOLELY AT THE BUYER’S RISK.

JSMSEMI assumes no liability for application assistance or customer product design. Customers are responsible for their products and applications using JSMSEMI products.

Resale of JSMSEMI products or services with statements diferent from or beyond the parameters stated by JSMSEMI for that product or service voids all express and any implied warranties for the associated JSMSEMI product or s ervice. JSMSEMI is not responsible or liable for any such statements.

JSMSEMI All Rights Reserved. Information and data in this document are owned by JSMSEMI wholly and may not be edited, reproduced, or redistributed in any way without the express written consent from JSMSEMI.

Any and all information described or contained herein are subject to change without notice due to product/technology improvement, etc.When designing equipment, refer to the "Delivery Specification" for the JSMSEMI product that you intend to use.

For additional information please contact Kevin@jsmsemi.com or visit www.jsmsemi.com