1. DESCRIPTION

The XLTJA1020 is the interface between the LIN master/slave protocol controller and the physical bus in a Local Interconnect Network (LIN). It is primarily intended for in-vehicle sub-networks using baud rates from 2.4 up to 20 Kbaud.

The transmit data stream of the protocol controller at the TXD input is converted by the LIN transceiver into a bus signal with controlled slew rate and wave shaping to minimize EME. The LIN bus output pin is pulled HIGH via an internal termination resistor. For a master application an external resistor in series with a diode should be connected between pin INH or pin BAT and pin LIN. The receiver detects the data stream at the LIN bus input pin and transfers it via pin RXD to the microcontroller.

In normal transceiver operation the XLTJA1020 can be switched in the normal slope mode or the low slope mode. In the low slope mode the XLTJA1020 lengthens the rise and fall slopes of the LIN bus signal, thus further reducing the already very low emission in normal slope mode.

In sleep mode the power consumption of the XLTJA1020 is very low, whereas in failure modes the power consumption is reduced to a minimum.

2. FEATURES

- Baud rate up to 20 Kbaud
- Very low ElectroMagnetic Emission (EME)
- High ElectroMagnetic Immunity (EMI)
- Low slope mode for an even further reduction of EME
- Passive behaviour in unpowered state
- Input levels compatible with 3.3 and 5 V devices
- Integrated termination resistor for Local Interconnect Network (LIN) slave applications
- Wake-up source recognition (local or remote)
- Supports K-line like functions.

3. LOW POWER MANAGEMENT

- Very low current consumption in sleep mode with local and remote wake-up.

4. PROTECTIONS

- Transmit data (TXD) dominant time-out function
- Bus terminal and battery pin protected against transients in the automotive environment
- Bus terminal short-circuit proof to battery and ground
- Thermally protected.

5. QUICK REFERENCE DATA

SYMBOL	PARAMETER	MIN.	TYP.	MAX.	UNIT
V_{BAT}	supply voltage on pin BAT	5	12	27	V
I_{BAT}	supply current on pin BAT in sleep mode	3	12.5	15	μA
	supply current on pin BAT in standby mode; bus recessive	200	500	1000	μA
	supply current on pin BAT in normal slope mode; bus recessive	300	530	1100	μA
	supply current on pin BAT in normal slope mode; bus dominant	1	1.5	6.0	mA
V_{LIN}	DC voltage on pin LIN	-27	-	+40	V
T_{vj}	virtual junction temperature	-40	-	+150	°C
$V_{esd(HBM)}$	electrostatic discharge voltage; human body model; pins NWAKE, LIN and BAT	-4	-	+4	kV

6. BLOCK DIAGRAM

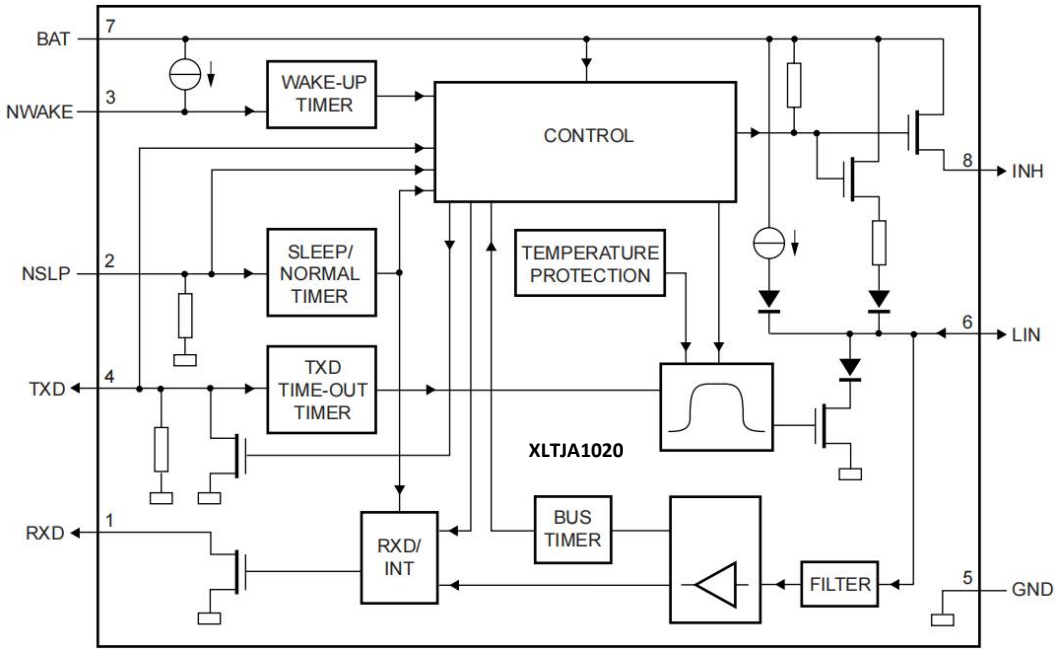

Fig.1 Block diagram

PINNING

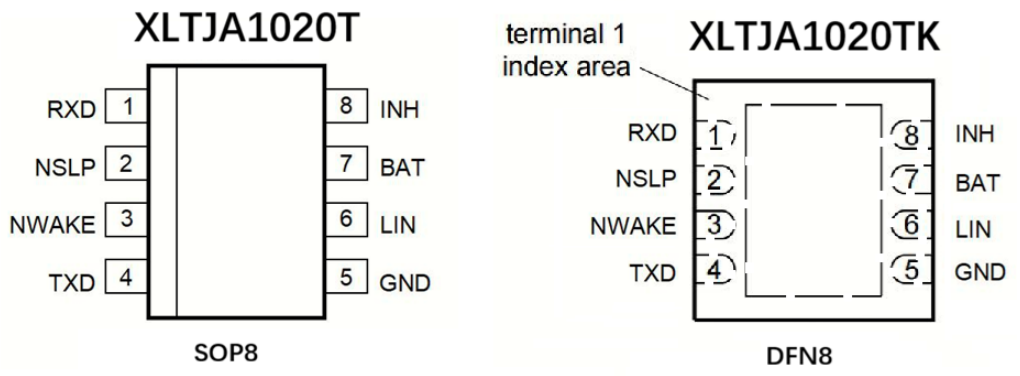

Fig.2 Pinning diagram (Top View)

SYMBOL	PIN	DESCRIPTION
RXD	1	receive data output (open-drain); active LOW after a wake-up event
NSLP	2	sleep control input (active LOW); controls inhibit output; resets wake-up source flag on TXD and wake-up request on RXD
NWAKE	3	local wake-up input (active LOW); negative edge triggered
TXD	4	transmit data input; active LOW output after a local wake-up event
GND	5	ground
LIN	6	LIN bus line input/output
BAT	7	battery supply
INH	8	battery related inhibit output for con- trolling an external voltage regulator; active HIGH after a wake-up event

7. FUNCTIONAL DESCRIPTION

The XLTJA1020 is the interface between the LIN master/slave protocol controller and the physical bus in a LocalInterconnect Network (LIN). The LIN transceiver is optimized for the maximum specified LIN transmission speed of 20 Kbaud providing optimum EMC performance due to wave shaping of the LIN output.

7.1. OPERATING MODES

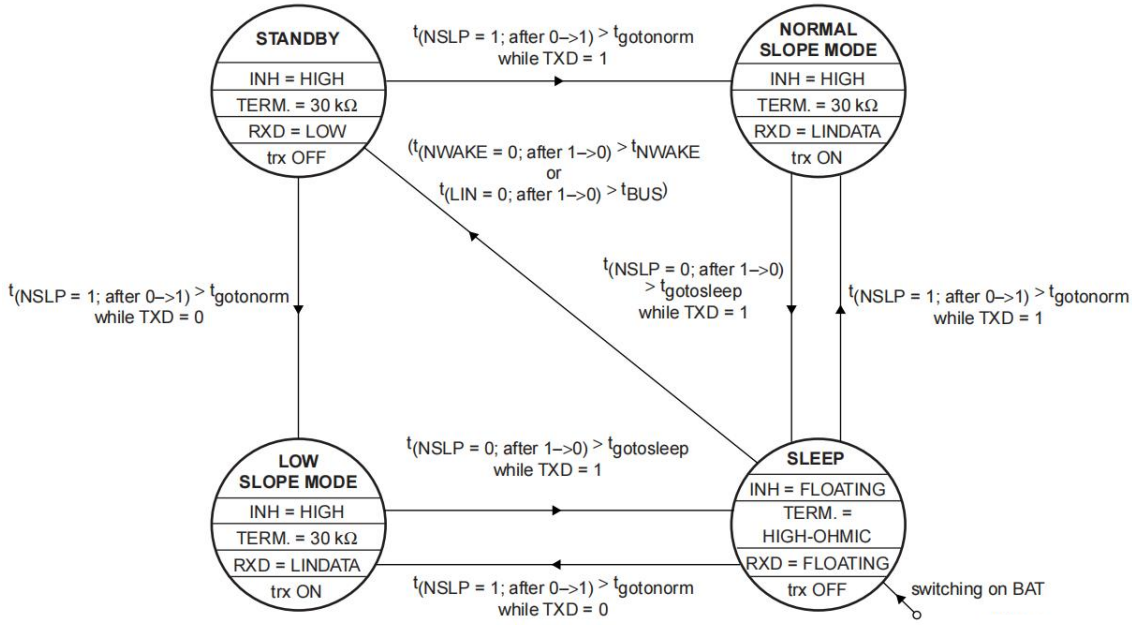

trx: transmitter.
TERM.: slave termination resistor, connected between pins LIN and BAT.

Fig.3 State diagram.

Table 1 Operating modes

MODE	NSLP	TXD (OUTPUT)	RXD	INH	TRANSMITTER	REMARKS
Sleep	0	weak pull-down	floating	floating	off	no wake-up request detected
Standby[(1)]	0	weak pull-down if remote wake-up; strong pull-down if local wake-up; note 2	LOW; note 3	HIGH	off	wake-up request detected; in this mode the microcontroller can read the wake-up source: remote or local wake-up
Normal slope mode	1	weak pull-down	HIGH: recessive state LOW: dominant state	HIGH	normal slope mode	notes 2, 3 and 4
Low slope mode	1	weak pull-down	HIGH: recessive state LOW: dominant state	HIGH	low slope mode	notes 2, 3 and 5

Notes
1. The standby mode is entered automatically upon any local or remote wake-up event during sleep mode. Pin INH and the 30 kΩ termination resistor at pin LIN are switched on.
2. The internal wake-up source flag (set if a local wake-up did occur and fed to pin TXD) will be reset when entering normal slope or low slope mode (NSLP goes HIGH).
3. The wake-up interrupt (on pin RXD) is released when entering normal slope or low slope mode (NSLP goes HIGH).
4. The normal slope mode is entered during a positive edge on NSLP while pin TXD is already set HIGH. In the event of a short-circuit to ground on pin TXD, the transmitter will be disabled.
5. The low slope mode is entered during the positive edge on NSLP while pin TXD is already pulled LOW.

7.2. Sleep mode

This mode is the most power saving mode of the XLTJA1020 and the default state after power-up (first battery supply). Despite its extreme low current consumption, the XLTJA1020 can still be waken up remotely via pin LIN, or waken up locally via pin NWAKE, or activated directly via pin NSLP. Filters at the inputs of the receiver (LIN), of pin NWAKE and of pin NSLP are preventing unwanted wake-up events due to automotive transients or EMI. All wake-up events have to be maintained for a certain time period (tBUS, tNWAKE and tgotonorm).

The sleep mode is initiated by a falling edge on the pin NSLP while TXD is already set HIGH. After a filter time continuously driven sleep command (pin NSLP = LOW), pin INH becomes floating.

In sleep mode the internal slave termination between pins LIN and BAT is disabled to minimize the power dissipation in case pin LIN is short-circuited to ground.Only a weak pull-up between pins LIN and BAT is present.

In sleep mode the internal slave termination between pins LIN and BAT is disabled to minimize the power dissipation in case pin LIN is short-circuited to ground. Only a weak pull-up between pins LIN and BAT is present.

7.3. Standby mode

The standby mode is entered automatically whenever alocal or remote wake-up occurs while the XLTJA1020 is in its sleep mode. These wake-up events activate pin INH and enable the slave termination resistor at the pin LIN. As a result of the HIGH condition on pin INH the voltage regulator and the microcontroller can be activated.

The standby mode is signalled by a LOW level on pin RXD which can be used as an interrupt for the microcontroller.

In the standby mode (pin NSLP is still LOW), the condition of pin TXD (weak pull-down or strong pull-down) indicates the wake-up source: weak pull-down for a remote wake-up request and strong pull-down for a local wake-up request.
Setting pin NSLP HIGH during standby mode results in the following events:

- An immediate reset of the wake-up source flag; thus releasing the possible strong pull-down at pin TXD before the actual mode change (after $t_{gotonorm}$) is performed
- A change into normal slope mode if the HIGH level on pin NSLP has been maintained for a certain time period ($t_{gotonorm}$) while pin TXD is pulled HIGH
- A change into low slope mode if the HIGH level on pin NSLP has been maintained for a certain time period ($t_{gotonorm}$) while pin TXD is pulled LOW either deliberately driven by the microcontroller, or due to a failure. In the event of a short-circuit to ground or an open-wire on pin TXD, the LIN output remains recessive (fail safe)
- A reset of the wake-up request signal on pin RXD if the HIGH level on pin NSLP has been maintained for a certain time period ($t_{gotonorm}$).

7.4. Normal slope mode

In the normal slope mode the transceiver is able to transmit and receive data via the LIN bus line. The receiver detects the data stream at the LIN bus input pin and transfers it via pin RXD to the microcontroller (see Fig.1): HIGH at a recessive level and LOW at a dominant level on the bus. The receiver has a supply voltage related threshold with hysteresis and an integrated filter to suppress bus line noise. The transmit data stream of the protocol controller at the TXD input is converted by the transmitter into a bus signal with controlled slew rate and wave shaping to minimize EME. The LIN bus output pin is pulled HIGH via an internal slave termination resistor. For a master application an external resistor in series with a diode should be connected between pin INH or BAT on one side and pin LIN on the other side (see Fig.7).

Being in the sleep or standby mode, the XLTJA1020 enters normal slope mode whenever a HIGH level on pin NSLP is maintained for a time of at least $t_{gotonorm}$ provided its preceding positive edge is executed while pin TXD is already set to HIGH.

The XLTJA1020 switches to sleep mode in case of a LOW level on pin NSLP, maintained during a certain time period ($t_{gotosleep}$) while pin TXD is already set to HIGH.

7.5. Low slope mode

The only difference between the normal slope mode and the low slope mode is the transmitter behaviour.

In the low slope mode the transmitter output stage drives the LIN bus line with lengthened rise and fall slopes. This will further reduce the already outstanding EME in the normal slope mode. The low slope mode is perfectly suited for applications where transmission speed is not critical.

The mode selection is done by the LIN transceiver after a positive edge on pin NSLP, maintained for a certain time period ($t_{gotonorm}$). If pin TXD is LOW at that time, the low slope mode is entered, otherwise the normal mode is entered. The transition to the low slope mode will be executed during an open pin TXD (fail-safe), a short-circuit from pin TXD to ground (fail-safe) or an intended LOW level of pin TXD programmed by the microcontroller. The transmitter is enabled after a LOW-to-HIGH transition on pin TXD. In the event of a short-circuit to ground on pin TXD, the transmitter will be disabled.

7.6. Wake-up

There are three ways to wake-up a XLTJA1020 which is insleep mode:

1. Remote wake-up via a dominant bus state
2. Local wake-up via a negative edge at pin NWAKE
3. Mode change (pin NSLP is HIGH) from sleep mode tonormal slope/low slope mode.

7.7. Remote and local wake-up

A falling edge at pin NWAKE followed by a LOW level maintained for a certain time period (t_{NWAKE}) results in a local wake-up. The pin NWAKE provides an internal pull-up towards pin BAT. In order to prevent EMI issues, it is recommended to connect an unused pin NWAKE to pin BAT.

If, during power-up, pin NWAKE is LOW for a certain period of time (t_{NWAKE}) this will also result in a local wake-up.

A falling edge at pin LIN followed by a LOW level maintained for a certain time period (t_{BUS}) and a rising edge at pin LIN respectively (see Fig.4) results in a remote wake-up.

After a local or remote wake-up pin INH is activated (it goes HIGH) and the internal slave termination resistor is switched on. The wake-up request is indicated by a LOW active wake-up request signal on pin RXD to interrupt the microcontroller.

7.8. Wake-up via mode transition

It is also possible to set pin INH HIGH with a mode transition towards normal slope/low slope mode via pin NSLP. This is useful for applications with a continuously powered microcontroller.

7.9. Wake-up source recognition

The XLTJA1020 can distinguish between a local wake-up request on pin NWAKE and a remote wake-up request via a dominant bus state. The wake-up source flag is set in case the wake-up request was a local one. The wake-up source can be read on pin TXD in the standby mode. If an external pull-up resistor on pin TXD to the power supply voltage of the microcontroller has been added a HIGH level indicates a remote wake-up request (weak pull-down at pin TXD) and a LOW level indicates a local wake-up request (strong pull-down at pin TXD; much stronger than the external pull-up resistor).

The wake-up request flag (signalled on pin RXD) as well as the wake-up source flag (signalled on pin TXD) are reset immediately, if the microcontroller sets pin NSLP HIGH.

7.10. TXD dominant time-out function

A 'TXD Dominant Time-out' timer circuit prevents the bus line from being driven to a permanent dominant state (blocking all network communication) if pin TXD is forced permanently LOW by a hardware and/or software application failure. The timer is triggered by a negative edge on pin TXD. If the duration of the LOW level on pin TXD exceeds the internal timer value (tdom), the transmitter is disabled, driving the bus line into a recessive state. The timer is reset by a positive edge on pin TXD.

7.11. Fail-safe features

Pin TXD provides a pull-down to GND in order to force apredefined level on input pin TXD in case the pin TXD isunsupplied.

Pin NSLP provides a pull-down to GND in order to forcethe transceiver into sleep mode in case the pin NSLP isunsupplied.

Pin RXD is set floating in case of lost power supply on pinBAT.

The current of the transmitter output stage is limited inorder to protect the transmitter against short-circuit to pinsBAT or GND.

A loss of power (pins BAT and GND) has no impact to the bus line and the microcontroller. There are no reverse currents from the bus. The LIN transceiver can be disconnected from the power supply without influencing the LIN bus.

The output driver at pin LIN is protected against overtemperature conditions. If the junction temperature exceeds the shutdown junction temperature Tj(sd), the thermal protection circuit disables the output driver. The driver is enabled again if the junction temperature has been decreased below Tj(sd) and a recessive level is present at pin TXD.

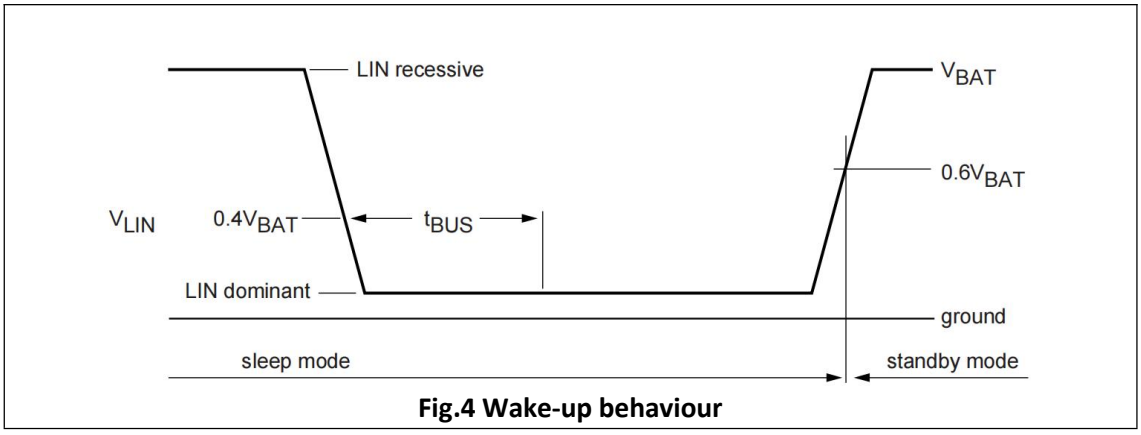

Fig.4 Wake-up behaviour

8. LIMITING VALUES

In accordance with the Absolute Maximum Rating System (IEC 60134); all voltages are referenced to pin GND.

SYMBOL	PARAMETER	CONDITIONS	MIN.	MAX.	UNIT
V_{BAT}	supply voltage on pin BAT		-0.3	+40	V
V_{TXD}, V_{RXD}, V_{NSLP}	DC voltage on pins TXD, RXD and NSLP		-0.3	+7	V
V_{LIN}	DC voltage on pin LIN		-27	+40	V
V_{NWAKE}	DC voltage on pin NWAKE		-1	+40	V
I_{NWAKE}	current on pin NWAKE (only relevant if $V_{NWAKE} < V_{GND}$ -0.3 V; current will flow into pin GND)		-15	-	mA
V_{INH}	DC voltage on pin INH		-0.3	V_{BAT} + 0.3	V
I_{INH}	output current at pin INH		-50	+15	mA
$V_{trt(LIN)}$	transient voltage on pin LIN (ISO7637)		-150	+100	V
T_{vj}	virtual junction temperature		-40	+150	°C
T_{stg}	storage temperature		-55	+150	°C
$V_{esd(HBM)}$	electrostatic discharge voltage; human body model on pins NWAKE, LIN and BAT on pins RXD, NSLP, TXD and INH	note 1	 -4 -2	 +4 +2	 kV kV
$V_{esd(MM)}$	electrostatic discharge voltage; machine model; all pins	note 2	-200	+200	V

Notes

1. Equivalent to discharging a 100 pF capacitor through a 1.5 kΩ resistor.
2. Equivalent to discharging a 200 pF capacitor through a 10 Ω resistor and a 0.75 µH coil. In the event of a discharge from pin INH to pin BAT: -150 V < Vesd(MM) < +150 V.

9. THERMAL CHARACTERISTICS

According to IEC60747-1.

SYMBOL	PARAMETER	CONDITION	TYP. VALUE	UNIT
$R_{th(j-a)}$	thermal resistance from junction to ambient in SOP8/ DFN8 package	in free air	120 / 70	K/W
$R_{th(j-s)}$	thermal resistance from junction to substrate bare die	in free air	55	K/W

10. CHARACTERISTICS

V_{BAT} = 5 to 27 V; T_{vj} = −40 to +150 °C; $R_{L(LIN-BAT)}$ = 500 Ω; all voltages are defined with respect to ground; positive currents flow into the IC; typical values are given at V_{BAT} = 12 V; unless otherwise specified; notes 1 and 2.

SYMBOL	PARAMETER	CONDITIONS	MIN.	TYP.	MAX.	UNIT
Supply						
I_{BAT}	supply current on pin BAT	sleep mode (V_{LIN} = V_{BAT}; V_{NWAKE} = V_{BAT}; V_{TXD} = 0 V; V_{NSLP} = 0 V)	3	12.5	15	µA
		standby mode; bus recessive (V_{INH} = V_{BAT}; V_{LIN} = V_{BAT}; V_{NWAKE} = V_{BAT}; V_{TXD} = 0 V; V_{NSLP} = 0 V)	200	500	1000	µA
		standby mode; bus dominant (V_{BAT} = 12 V; V_{INH} = 12 V; V_{LIN} = 0 V; V_{NWAKE} = 12 V; V_{TXD} = 0 V; V_{NSLP} = 0 V); note 3	600	1100	1500	µA
		low slope mode; bus recessive (V_{INH} = V_{BAT}; V_{LIN} = V BAT; V_{NWAKE} = V_{BAT}; V_{TXD} = 5 V; V_{NSLP} = 5 V)	300	530	1100	µA
		normal slope mode; bus recessive (V_{INH} = V_{BAT}; V_{LIN} = V_{BAT}; V_{NWAKE} = V_{BAT}; V_{TXD} = 5 V; V_{NSLP} = 5 V)	300	530	1100	µA
		low slope mode; bus dominant (V_{BAT} = 12 V; 3V_{INH} = 12 V; V_{NWAKE} = 12 V; V_{TXD} = 0 V; VNSLP = 5 V); note 3	1	1.5	6	mA
		normal slope mode; bus dominant (V_{BAT} = 12 V; V_{INH} = 12 V; V_{NWAKE} = 12 V; V_{TXD} = 0 V; V_{NSLP} = 5 V); note 3	1	1.5	6	mA
Pin TXD						
V_{IH}	HIGH-level input voltage		2	-	7	V
V_{IL}	LOW-level input voltage		-0.3	-	+0.8	V
V_{hys}	TXD hysteresis voltage		0.03	-	0.5	V
R_{TXD}	TXD pull-down resistor	V_{TXD} = 5 V	100	300	800	kΩ

SYMBOL	PARAMETER	CONDITIONS	MIN.	TYP.	MAX.	UNIT
I_{IL}	LOW-level input current	V_{TXD} = 0 V	-5	0	+5	µA
I_{OL}	LOW-level output current (local wake-up request)	standby mode; V_{NWAKE} = 0 V; V_{LIN} = V_{BAT}; V_{TXD} = 0.4 V	1.5	3	-	mA
Pin NSLP						
V_{IH}	HIGH-level input voltage		2	-	7	V
V_{IL}	LOW-level input voltage		-0.3	-	+0.8	V
V_{hys}	NSLP hysteresis voltage		0.03	-	0.5	V
R_{NSLP}	NSLP pull-down resistor	V_{NSLP} = 5 V	100	300	800	kΩ
I_{IL}	LOW-level input current	V_{NSLP} = 0 V	-5	0	+5	µA
Pin RXD (open-drain)						
I_{OL}	LOW-level output current	normal slope mode; V_{LIN} = 0 V; V_{RXD} = 0.4 V	1.3	3.5	-	mA
I_{LH}	HIGH-level leakage current	normal slope mode; V_{LIN} = V_{BAT}; V_{RXD} = 5 V	-5	0	+5	µA
Pin NWAKE						
V_{IH}	HIGH-level input voltage		V_{BAT} - 1	-	V_{BAT} + 0.3	V
V_{IL}	LOW-level input voltage		-0.3	-	V_{BAT} - 3.3	V
I_{IL}	NWAKE pull-up current	V_{NWAKE} = 0 V	-30	-10	-3	µA
I_{LH}	HIGH-level leakage current	V_{NWAKE} = 27 V; V_{BAT} = 27 V	-5	0	+5	µA
Pin INH						
$R_{sw(INH)}$	switch-on resistance between pins BAT and INH	standby; low slope or normal slope mode; I_{INH} = -15 mA; V_{BAT} = 12 V	-	40	90	Ω
I_{LH}	HIGH-level leakage current	sleep mode; V_{INH} = 27 V; V_{BAT} = 27 V	-5	0	+5	µA
Pin LIN						
$V_{o(reces)}$	LIN recessive output voltage	V_{TXD} = 5 V; I_{LIN} = 0 mA	0.9V_{BAT}	-	V_{BAT}	V
$V_{o(dom)}$	LIN dominant output voltage	V_{TXD} = 0 V; V_{BAT} = 7.3 V	-	-	1.2	V
		V_{TXD} = 0 V; V_{BAT} = 7.3; R_L = 1 kΩ	0.6	-	-	V
		V_{TXD} = 0 V; V_{BAT} = 18 V	-	-	2.0	V
		V_{TXD} = 0 V; V_{BAT} = 18 V; R_L = 1 kΩ	0.8	-	-	V
I_{LH}	HIGH-level leakage current	V_{LIN} = V_{BAT}	-1	0	+1	µA
I_{IL}	LIN pull-up current	sleep mode; V_{LIN} = 0 V; V_{NSLP} = 0 V	-2	-5	-10	µA

SYMBOL	PARAMETER	CONDITIONS	MIN.	TYP.	MAX.	UNIT
R_{SLAVE}	slave termination resistance to pin BAT	standby, low slope or normal slope mode; V_{LIN} = 0 V; V_{BAT} = 12 V	20	30	60	kΩ
$I_{o(sc)}$	short-circuit output current	V_{LIN} = V_{BAT} = 12 V; V_{TXD} = 0 V; t < t_{dom}	27	40	60	mA
		V_{LIN} = V_{BAT} = 27 V; V_{TXD} = 0 V; t < t_{dom}	60	90	125	mA
$V_{th(rx)}$	receiver threshold voltage	V_{BAT} = 7.3 to 27 V	0.4 V_{BAT}	-	0.6 V_{BAT}	V
$V_{cntr(rx)}$	receiver centre voltage	V_{BAT} = 7.3 to 27 V	0.475 V_{BAT}	0.5 V_{BAT}	0.525 V_{BAT}	V
$V_{thr(hys)}$	receiver threshold hysteresis voltage	V_{BAT} = 7.3 to 27 V	0.145 V_{BAT}	0.16 V_{BAT}	0.175 V_{BAT}	V
Thermal shutdown						
$T_{j(sd)}$	shutdown junction temperature		160	170	190	°C
AC characteristics						
$\Delta t_{d(TXD-BUSon/off)}$	TXD propagation delay failure	normal slope mode; C_L = 10 nF; R_L = 500 Ω; (see Fig.5) $t_{PropTxDom}$ - $t_{PropTxRec}$	-2	0	+2	µs
$\Delta t_{d(TXD-BUSon/off)}$	TXD propagation delay failure	low slope mode; C_L = 10 nF; R_L = 500 Ω; (see Fig.5) $t_{PropTxDom}$ -$t_{PropTxRec}$	-5	0	+5	µs
$\Delta t_{d(BUSon/off-RXD)}$	RXD propagation delay failure	normal slope mode and low slope mode; C_L = 0; R_L = ∞ ; voltage on LIN externally forced; LIN slope time <500 ns; C_{RXD} = 20 pF; R_{RXD} = 2.4 kΩ; (see Fig.5) $t_{PropRxDom}$ - $t_{PropRxRec}$	-2	0	+2	µs
$t_{f(slope)(dom)}$	fall time LIN (100% to 0%)	normal slope mode; C_L = 10 nF; R_L = 500 Ω;. V_{BAT} = 12 V; transition from recessive to dominant; note 4 (see Fig.5)	-	16	27	µs
$t_{r(slope)(rec)}$	rise time LIN (0% to 100%)	normal slope mode; C_L = 10 nF; R_L = 500 Ω; V_{BAT} = 12 V; transition from dominant to recessive; note 5 (see Fig.5)	-	16	27	µs

SYMBOL	PARAMETER	CONDITIONS	MIN.	TYP.	MAX.	UNIT
$\Delta t_{slope(norm)}$	normal slope symmetry	normal slope mode; C_L = 10 nF; R_L = 500 Ω; V_{BAT} = 12 V; $t_{f(slope)(dom)} - t_{r(slope)(rec)}$	-5	0	+5	µs
$t_{f(slope)(norm)(dom)}$	normal slope fall time LIN (100% to 0%)	normal slope mode; C_L = 6.8 nF; R_L = 660 Ω; V_{BAT} = 12 V; transition from recessive to dominant; note 4	-	12	22.5	µs
$t_{r(slope)(norm)(rec)}$	normal slope rise time LIN (0% to 100%)	normal slope mode; C_L = 6.8 nF; R_L = 660 Ω; V_{BAT} = 12 V; transition from dominant to recessive; note 5	-	12	22.5	µs
$\Delta t_{slope(norm)}$	normal slope symmetry	normal slope mode; C_L = 6.8 nF; R_L = 660 Ω; V_{BAT} = 12 V; $t_{f(slope)(dom)} - t_{r(slope)(rec)}$	-4	0	+4	µs
$t_{f(slope)(low)(dom)}$	low slope fall time LIN (100% to 0%)	low slope mode; C_L = 10 nF; R_L = 500 Ω; V_{BAT} = 12 V; note 4	-	30	62	µs
$t_{r(slope)(low)(rec)}$	low slope rise time LIN (0% to 100%)	low slope mode; C_L = 10 nF; R_L = 500 Ω; V_{BAT} = 12 V; note 5	-	30	62	µs
t_{BUS}	dominant time for wake-up via bus	sleep mode	30	70	150	µs
t_{NWAKE}	dominant time for wake-up via pin NWAKE	sleep mode	7	20	50	µs
$t_{gotonorm}$	time period for mode change from sleep or standby mode into normal/low slope mode		2	5	10	µs
$t_{gotosleep}$	time period for mode change from normal/low slope mode into sleep mode		2	5	10	µs
t_{dom}	TXD dominant time out	V_{TXD} = 0 V	--	60	100	ms

Notes

1. All parameters are guaranteed over the virtual junction temperature by design, but only 100% tested at 125 °C ambient temperature for dies on wafer level and, in addition to this, 100% tested at 25 °C ambient temperature for cased products, unless otherwise specified.
2. For bare die, all parameters are only guaranteed if the backside of the bare die is connected to ground.
3. If V_{BAT} is higher than 12 V, the battery current increases due to the internal LIN termination resistor. The minimum value of this resistor is 20 kΩ. The maximum current increase is therefore: $I_{BAT(increase)} = \frac{V_{BAT} - 12\ V}{20\ k\Omega}$
4. $t_{f(slope)(dom)} = \frac{(t_{VLIN} = 40\%) - (t_{VLIN} = 95\%)}{0.55}$; see Fig.6.
5. $t_{r(slope)(rec)} = \frac{(t_{VLIN} = 60\%) - (t_{VLIN} = 5\%)}{0.55}$; see Fig.6.

11. TIMING DIAGRAMS

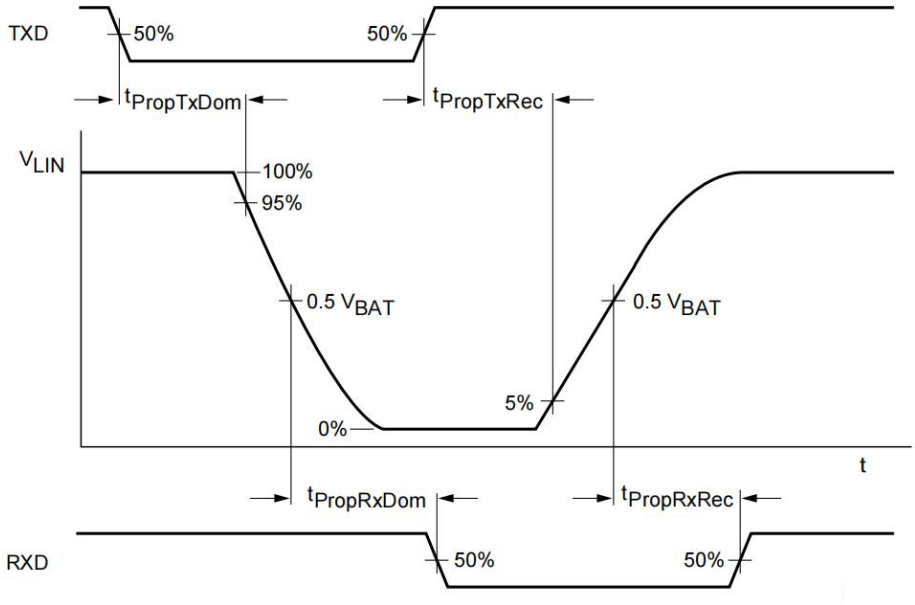

Fig.5 Timing diagram for AC characteristics, bus loaded

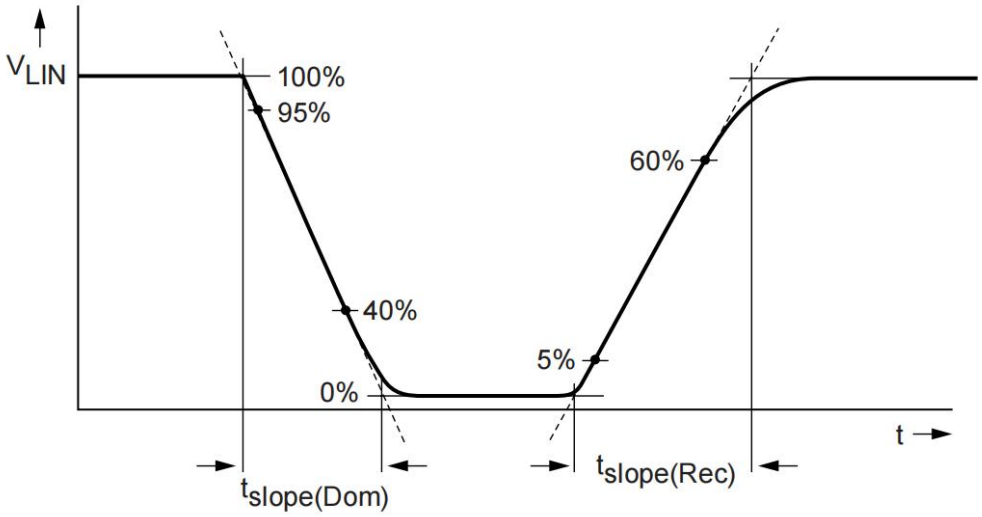

Fig.6 Definition of slope timing

12. APPLICATION INFORMATION

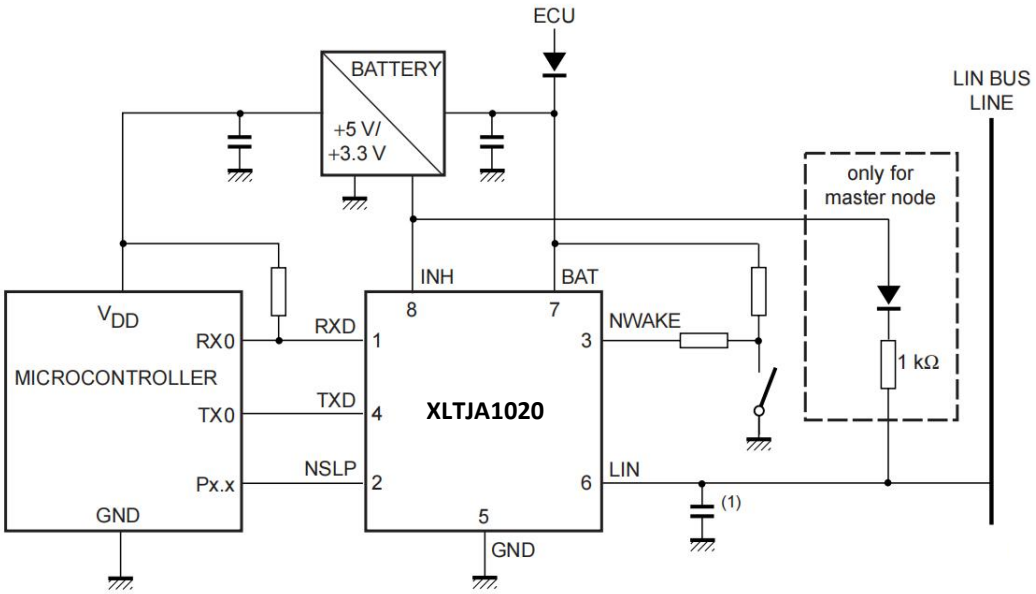

More information is available in a separate application note.
(1) Cmaster = 1 nF; Cslave = 220 pF.

Fig.7 Typical application of the XLTJA1020

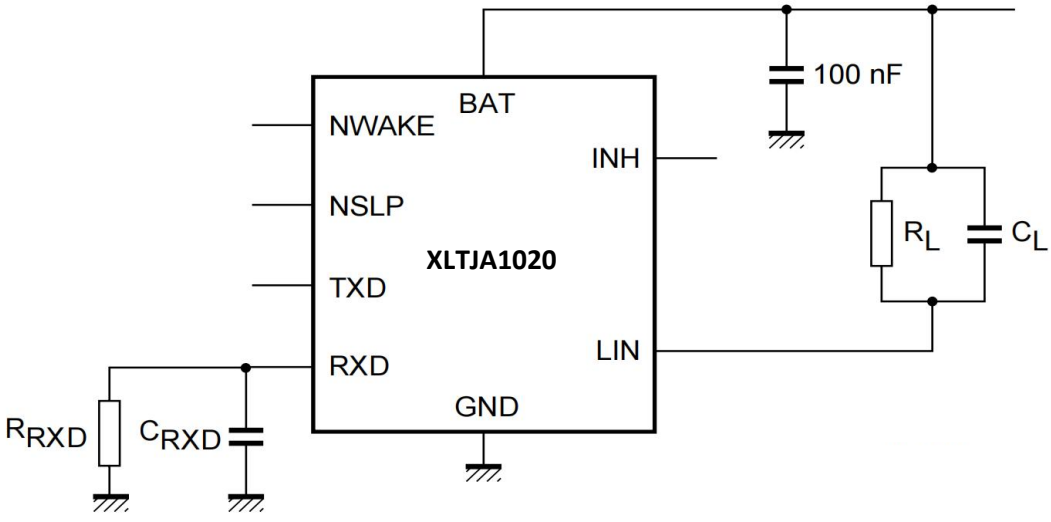

Fig.8 Test circuit for AC characteristics

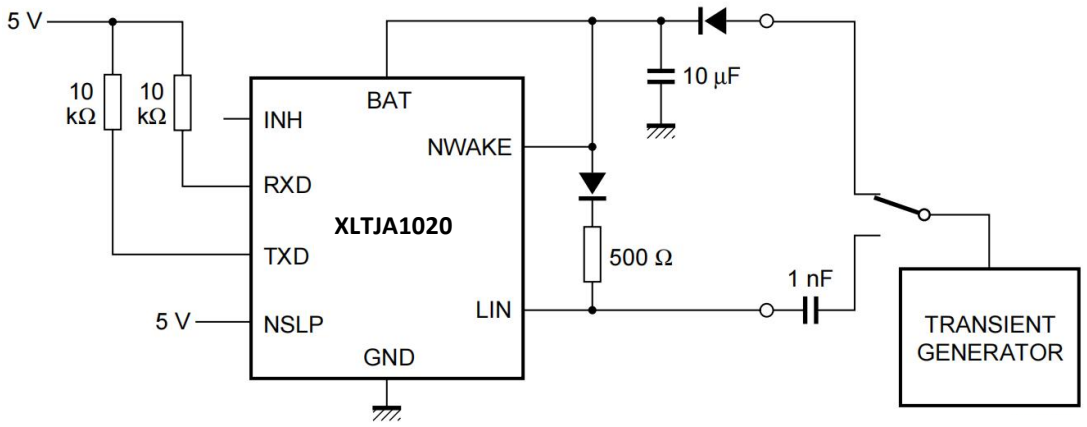

The waveforms of the applied transients on pin 6 (LIN) and pin 7 (BAT) are according to ISO7637 part 1, test pulses 1, 2, 3a, 3b, 4, 5, 6 and 7.

Fig.9 Test circuit for automotive transients

13. ORDERING INFORMATION

Ordering Information

Part Number	Device Making	Package type	Body size (mm)	Temperate (℃)	MSL	Transpo Rt	Package Quantit
XLTJA1020T/CM,118	XL1020T	SOP8	4.90*3.90	-40 to +125	MSL3	T&R	2500
XLTJA1020TK	XL1020K	DFN8(3*3)	3.00*3.00	-40 to +125	MSL3	T&R	6000

14. DIMENSIONAL DRAWINGS

SOP8

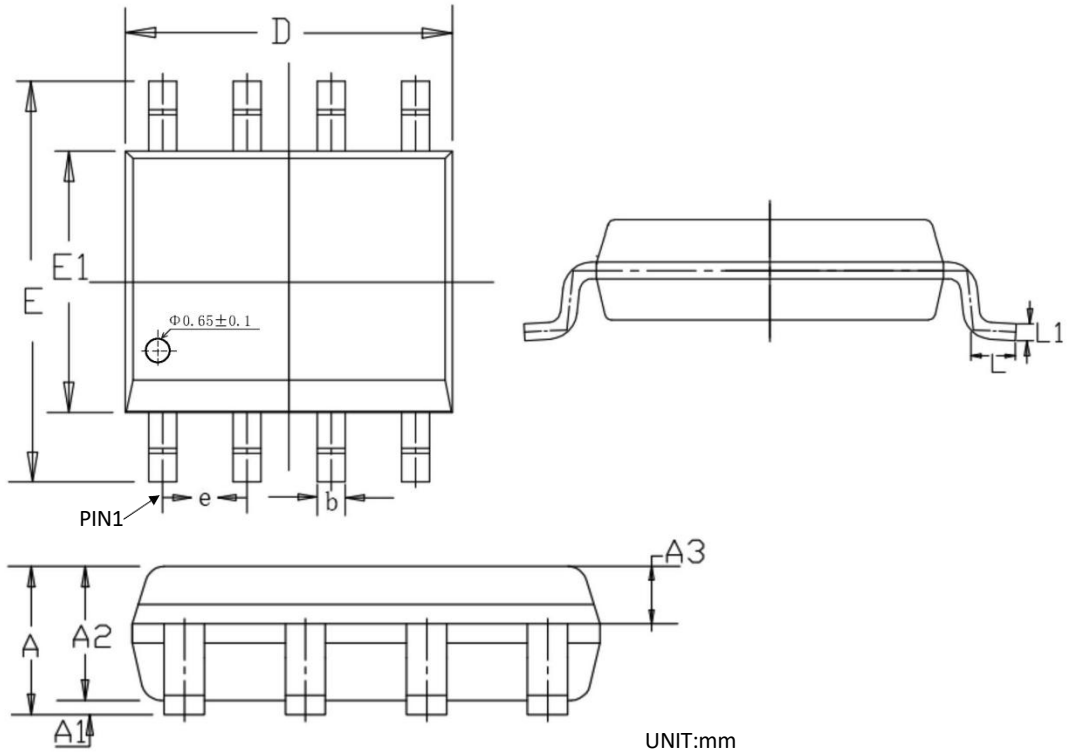

UNIT:mm

	MIN	NOM	MAX
A	1.450	1.550	1.650
A1	0.100	0.150	0.200
A2	1.300	1.400	1.500
A3	0.600	0.650	0.700
b	0.380	-	0.510
e	1.240	1.270	1.300
D	4.800	4.900	5.000
E	5.800	6.000	6.200
E1	3.800	3.900	4.000
L	0.450	0.600	0.750
L1	—	0.25BSC	—

DFN8(3*3)

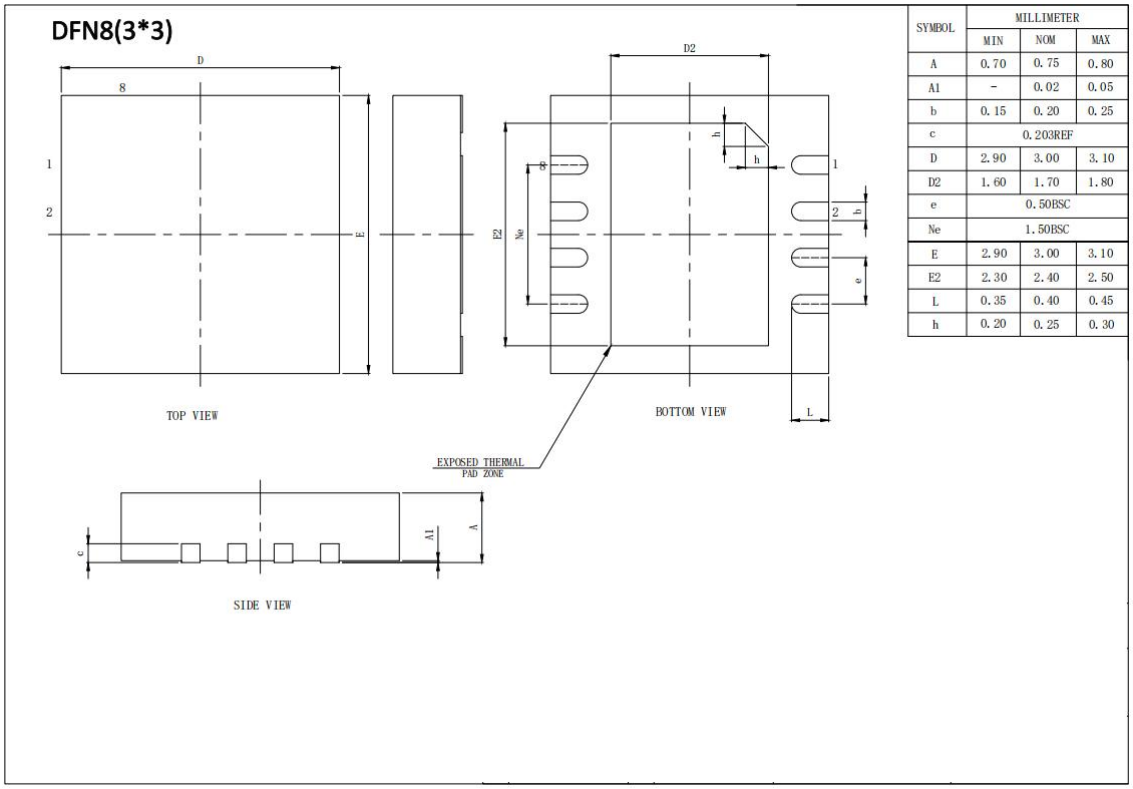

SYMBOL	MILLIMETER		
	MIN	NOM	MAX
A	0.70	0.75	0.80
A1	-	0.02	0.05
b	0.15	0.20	0.25
c	0.203REF		
D	2.90	3.00	3.10
D2	1.60	1.70	1.80
e	0.50BSC		
Ne	1.50BSC		
E	2.90	3.00	3.10
E2	2.30	2.40	2.50
L	0.35	0.40	0.45
h	0.20	0.25	0.30

[if you need help contact us. Xinluda reserves the right to change the above information without prior notice]