

3D SHOWN

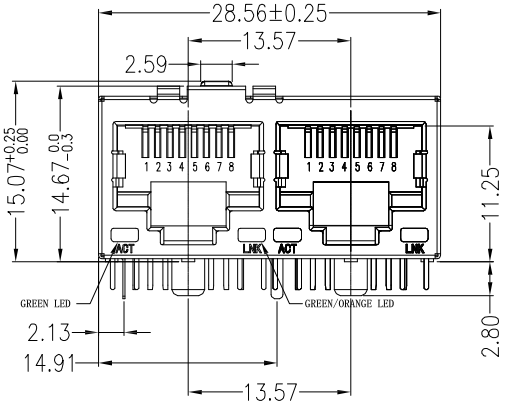

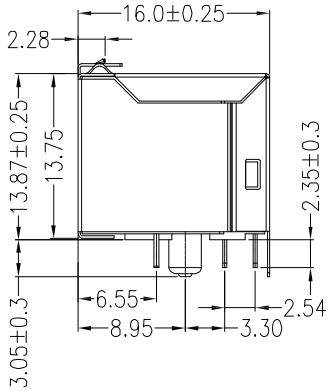

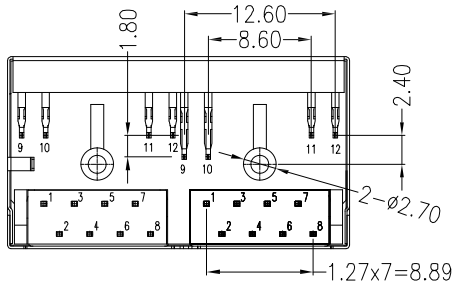

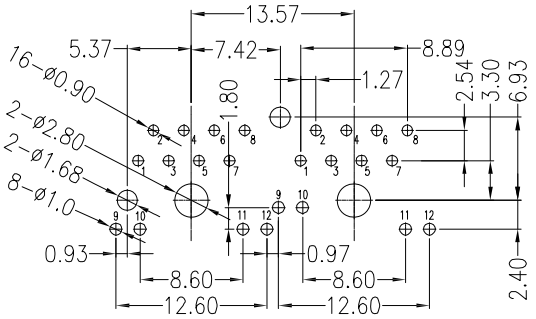

PCB LAYOUT

SPECIFICATIONS :

MATERIAL:

1.Housing:High Temperature Thermoplastic UL94V-0, PA9T COLOR:BLACK

2.Contact: T=0.35mm Phosphor Bronze 3u"Gold Plating Over Nickel In Contact, Tin Plating Over Nickel In Solder Area..

3. SHELL MATERIAL: C2680 T=0.20MM. SHELL PL ATING: PL ATED NICKEL 30- 80U".

4..LED: ACCORDING TO LED SPECIFICATIONS.

ELECTRICAL:

1.VOLTAGE RATING:125V

2.CURRENT RATING:1.5A

3.CONTACT RESISTANCE:30mΩ

4.INSULATION RESISTANCE:500MΩ

5.DIELECTRIC WITHSTANDING VOLTAGE:1000V

MECHANICAL:

1.DURABILITY :750 CYCLES Min.

2.MATING/UNMATING FORCE: 30N Max

3.RETENTION STRENGTH: 50N FOR 60S±5S

ENVIRONMENTAL:

1.STORAGE TEMPERATURE :-40°C TO 85°C.

2.OPERATION TEMPERATURE :-40°C TO 85°C.

3.SOLDERING CONDITIONS : IR RE-FLOW TEMPERATURE 260°C 10S Max.

LIGHT COLOR	GREEN	ORANGE
PEAK EMISSION WAVELENGTH(if=20mA)	565nm TYP	608nm TYP
DOMINANT WAVELENGTH(if=20mA)	565~575(nm)	600~610(nm)

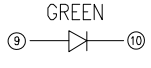

LEFT LED

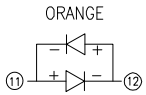

RIGHT LED

TOLERANCE TABLE	
.0	±0.30
.00	±0.20
.000	±0.05

APPROVED:	DATE:	深圳市灿科盟实业有限公司 CANKEMENG INDUSTRIAL CO.,LTD
CHECKED:	DATE:	TITLE: RJ45-8P/8C 56F 1*2 双口 带屏蔽 带灯带卡弹
DRAWN: YKX	DATE: 2026-07-14	PART. NO. R-RJ45R08P-CT20
		UNIT mm SCALE free
		FILE NO. Ckmtw-RJ45-0571 REV. A KC01

CKM-QR-GC-07/A0