承 认 书

APPROVAL SHEET

客户(Customer)	深圳市立创电子商务有限公司
系列(Series)	RR
客户料号(CSTMR P/N)	/
TOPAZCON料号(OUR P/N)	ERR2H220M122000Y
规格(SPEC)	22μF/500V/Φ12.5x20/105℃/±20%/12000H 长脚

日期: 2026/7/22

APPROVED BY

Please Return One Copy with Your Approval

承认后请寄回一份

ADMITTING BY	CHECKED BY	APPROVED BY

PREPARED BY	CHECKED BY	APPROVED BY
欧毅红 R&D	甘慈 R&D	邹翠萍 R&D

变更记录

版本	更改原因	更改内容	生效日期
A.0	新建		2026.07.22

■外形尺寸 Dimensions

unit:mm

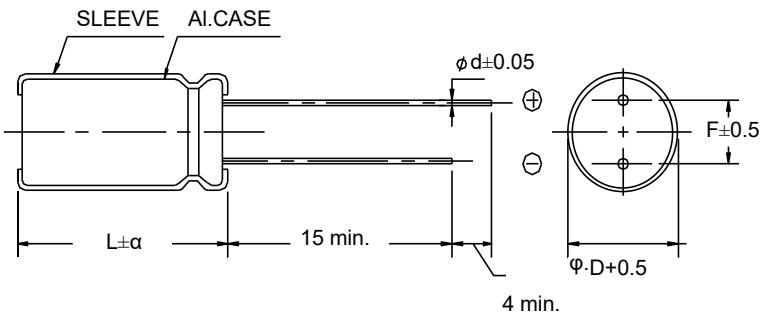

ΦD	L	F	Φd	α
12.5	20	5.0	0.60	-1/+2

■电气特性 Characteristics

Series	Cap (uF)	cap.Tol (±%)	WV (VDC)	SV (VDC)	Oper.Temp. (℃)	ΦD (mm)	L (mm)	LC Max (uA)	Tan δ (Max)	R/C (mArms)	Imp (Ω)	Load life (hours)
RR	22	20	500	550	105	12.5	20	340	0.24	456	/	12000

容量测试 Capacitance Test: at 20℃, 120 Hz.
损失角测试 Dissipation Factor Test: at 20℃, 120 Hz
漏电流测试 Leakage Current Test: at 20℃ after 2 minutes ;
阻抗测试 Impedance: at 20℃,100K Hz ;
纹波电流测试 Ripple Current Test : 105 ℃ ,100K Hz ;
工作温度 Operating temperature: -40 ℃ / 105 ℃ ;
如果有特殊要求，请与我们联系 If you have some other application, please contact with us in advance.

■纹波系数 Rated ripple current multipliers

频率 Frequency (Hz)	120	1K	10K	100K
系数 Multipliers	0.50	0.80	0.90	1.00

■套管图面 Printing

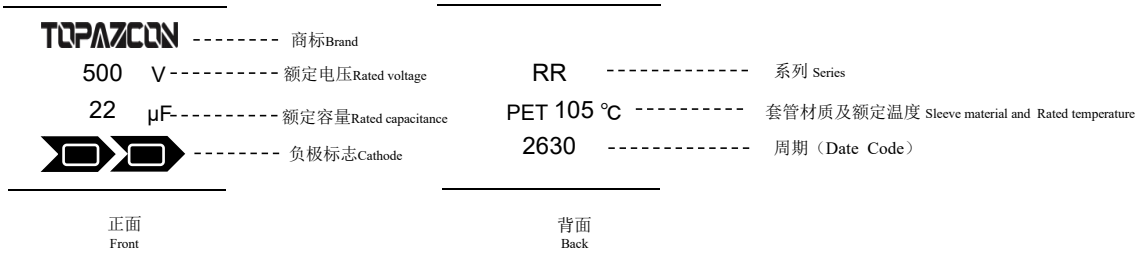

D/C格式说明:D/C用“年 + 周”四位数字表示，
前两位数字为年，26代表2026年，后两位数字为周，第1、2周为01，第3、4周为03，
第5、6周为05，以此类推。例如D/C印字为“2609”，代表2026年第9、10周。

■构造图及材料表 Frame drawing and Material list

构造图 Component Structure

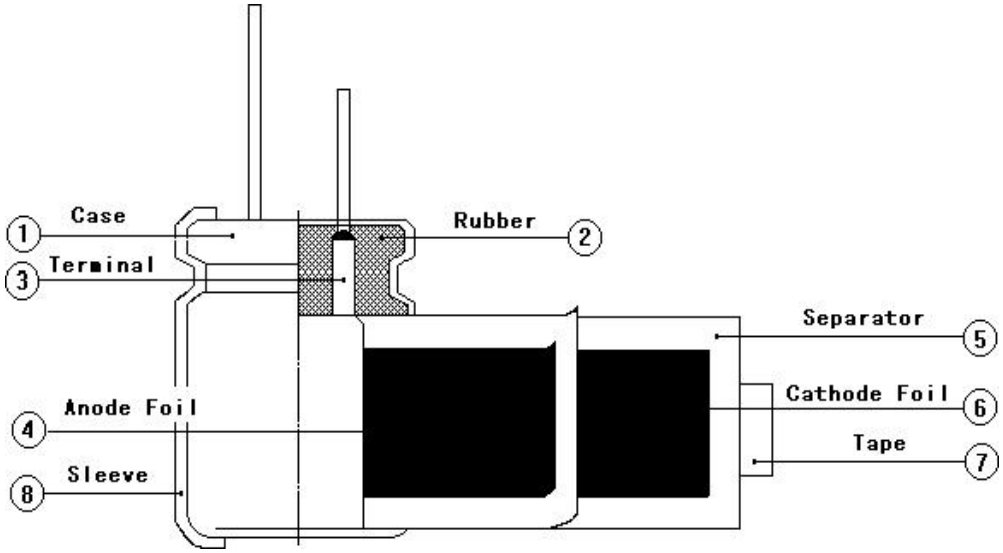

材料表 Material list

NO	部件名称 Parts	材料名称 Material	主要供应厂家名称 Main supply Factory
①	铝壳 AL- case	99.5%纯度铝 AL －99.5%	联亿/奥星
②	橡胶塞 Rubber	丁基橡胶 IIR rubber	联华鑫/天华/城南
③	引出线 Lead Wire	铝线 LG3+镀锡铜钢线 AL- wire LG3+Tin- plating of copper cover stee	晶钻/南平/建兴
④	阳极箔 AL － foil(+)	99.99%形成铝箔 Formed AL 99.99%	中雅/东阳光/宏远/众和
⑤	电解纸 Separstor pape	电解电容器纸 Electrolytic Capacitor paper	源润电子/创元/鲁南
⑥	阴极箔 AL － foil(-)	98.7%腐蚀铝箔 Formed AL 98.7%	飞乐/富奕达
⑦	胶带 Tape	聚丙烯 Polypropylene	晖阳/龙美
⑧	套管 Sleeve	聚乙烯 (P.E.T)	云霖/长园/长信源
⑨	电解液 Electrolyte	EG	深圳新宙邦/TOPAZCON

■有害物质管制 Hazardous substances control

符合RoHS 指令及 REACH 法规要求

物质清单

(Material Safety Data Sheet)

NO	部件名称 Parts	材料名称 Material	Cd	Pd	Cr	Hg	PBBs	PBDEs	报告编号 Report No.
①	铝壳 AL- case	99.5%纯度铝 AL -99.5%	N.D	N.D	N.D	N.D	N.D	N.D	NGBPC25008626902
②	橡胶塞 Rubber	丁基橡胶 IIR rubber	N.D	N.D	N.D	N.D	N.D	N.D	A2260263462102003
③	引出线 Lead Wire	铝线 LG3+镀锡铜钢线 AL- wire LG3+Tin- plating of copper cover stee	N.D	N.D	N.D	N.D	N.D	N.D	A2250814118101E
④	阳极箔 AL - foil(+)	99.99%形成铝箔 Formed AL 99.99%	N.D	N.D	N.D	N.D	/	/	TAOEC25011462212
⑤	电解纸 Separstor pape	电解电容器纸 Electrolytic Capacitor paper	N.D	N.D	N.D	N.D	N.D	N.D	CANEC26001230452
⑥	阴极箔 AL - foil(-)	98.7%腐蚀铝箔 Formed AL 98.7%	N.D	N.D	N.D	N.D	N.D	N.D	CKGEC25001392406
⑦	胶带 Tape	聚丙烯 Polypropylene	N.D	N.D	N.D	N.D	N.D	N.D	CANEC26016396004
⑧	套管 Sleeve	聚乙烯 (P.E.T)	N.D	N.D	N.D	N.D	N.D	N.D	SZXEC26000460501
⑨	电解液 Electrolyte	EG	N.D	N.D	N.D	N.D	N.D	N.D	CANEC25024550602

■ 物料编码原则 Part Number System

1	2	3	4	5	6	7	8	9	10	11	12	13	14	15	16	17
E	R	R	2	H	2	2	0	M	1	2	2	0	0	0	Y	
①	②		③		④			⑤	⑥				⑦		⑧	⑨
分类	系列		电压		容量			误差	直径		高度		引脚		颜色	其他
Category	Series		Voltage		Capacitance			Tol.	Dia.		Length		Terminal		Colour	Other

①分类Category

编码Code	代码Code	种类Type	备注Remark
1	E	Electrolytic Capacitor	铝电解电容
	P	Conductive Polymer	导电高分子固体铝
	S	super-capacitor	超级电容

②系列Series			③电压Voltage			④容量Capacitance				⑤Tolerance		尺寸	⑥尺寸Size				⑦引脚Terminal	
系列series	编码Code		电压 WV	编码Code		容量 Cap	编码Code			容量误差 Tolerance	编码Code	Size	直径编码 Dia. Code		高度编码Length Code		形式 Specification	编码Code
	2	3		4	5		6	7	8		9		10	11	12	13		14~15
SS	S	S	4	0	G	0.1	R	1	0	-5~+5	J	3×5	0	3	0	5	Bulk packing	00
NP	N	P	6.3	0	J	0.22	R	2	2	-10~+10	K	4×5	0	4	0	5		T1
LL	L	L	10	1	A	0.33	R	3	3	-20~+20	M	5×5	0	5	0	5		T2
RD	R	D	16	1	C	0.47	R	4	7	-5~+20	F	6.3×5	0	6	0	5	₵3-18 Taping	T3
RE	R	E	25	1	E	1	1	R	0	-10~+20	V	4×7	0	4	0	7		T4
RF	R	F	35	1	V	2.2	2	R	2	-10~+30	Q	5×7	0	5	0	7		T5
RG	R	G	40	1	G	3.3	3	R	3	-20~+0	S	6.3×7	0	6	0	7		A
RJ	R	J	50	1	H	4.7	4	R	7	-0~+20	A	8×7	0	8	0	7		B
RR	R	R	55	1	I	6.8	6	R	8			5×11	0	5	1	1		C
LF	L	F	63	1	J	10	1	0	0			6.3×11	0	6	1	1		E
LJ	L	J	70	1	L	22	2	2	0			8×12	0	8	1	2		F
LR	L	R	80	1	K	33	3	3	0			8×16	0	8	1	6		K
LG	L	G	100	2	A	47	4	7	0			10×12	1	0	1	2	Lead Cut	L
RS	R	S	120	2	B	100	1	0	1			10×16	1	0	1	6		M
RN	R	N	140	2	L	220	2	2	1			8×20	0	8	2	0		R
RV	R	V	160	2	C	330	3	3	1			10×20	1	0	2	0		S
LH	L	H	180	2	Q	470	4	7	1			13×20	1	3	2	0		L
TE	T	E	200	2	D	560	5	6	1			13×40	1	3	4	0		Y
TF	T	F	220	2	N	1000	1	0	2			16×25	1	6	2	5		Z
TG	T	G	250	2	E	1500	1	5	2			16×32	1	6	3	2	M Type	G
LP	L	P	300	2	S	2200	2	2	2			16×36	1	6	3	6		
LT	L	T	315	2	F	3300	3	3	2			18×32	1	8	3	2		
LS	L	S	350	2	V	4700	4	7	2			18×36	1	8	3	6		
LV	L	V	385	2	P	6800	6	8	2			18×40	1	8	4	0		
RK	R	K	400	2	G	10000	1	0	3									
RA	R	A	420	2	T	15000	1	5	3									
RX	X	X	450	2	W	22000	2	2	3									
			500	2	H	33000	3	3	3									
			550	2	I	56000	5	6	3									
			600	2	K	68000	6	8	3									

⑧颜色代码 Colour Code

编码Code	颜色	黑色	黄色	墨绿色	淡绿色	橙色	白色	紫色	银色	咖啡色
16	Colour	Black	Yellow	Ink Green	Light Green	Orange	White	Purple	Silver	Brown
	代码Code	B	Y	I	L	O	W	P	S	C

⑨特殊代码 Other

用于标记客户特殊要求

Used to mark special requirements of customers

■ 焊接温度及注意事项 Solder temperature and notes

●无铅波峰焊 Ware soldering(lead-free)

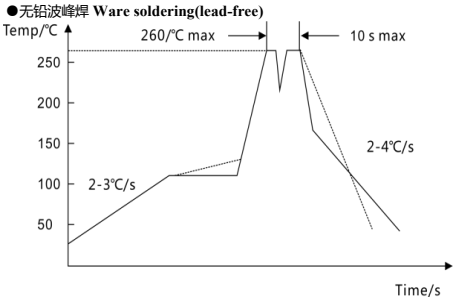

●烙铁焊接 Iron soldering

烙铁作业:最高温度：350±5℃，焊接时间：3±0.5 秒.

注意事项 notes:

①PCB主面预热温度最高升温斜率:2→3℃ / sec ，预热时长:120s左右；
②PCB主面预热温度范围:90-130℃；
③PCB俯面最高预热温度不超过130℃；
④波峰温度与预热区温度落差不能大于150℃.
⑤波峰焊锡炉温度应控制在250-260℃ 之间；
⑥波谷温度最好不能低于217℃，也就是说如果是双波峰，两个波峰之间落差不能大于60度，以防造成二次焊接；
⑦焊接时间:双波波峰”I”控制在0.5-2s 之间，波峰”II”的时间控制在1.5-4s之间，合计时间:2-6s。单波时间控制在2-6s.
⑧冷却区斜率一般指从最高温降到90℃时间平均负斜率-4→-2℃/s

■ 概述 Scope

本规范规定了所有系列径向引线引出铝电解电容器的技术规范。

This specification covers"ALL series" miniature single-ended aluminium electrolytic capacitors.

■ 参考标准 Standard

本承认书参考 JIS-C-5101-1 和 JIS-C-5101-4 制定

This approval sheet consulted the institute of JIS-C-5101-1 and JIS-C-5101-4.

■ 工作温度范围 Operating temperature range

工作温度范围是电容器在施加额定工作电压条件下，可以长期可靠工作的环境温度范围。

Operating temperature range is the range of ambient temperature at which the capacitor can be operated continuously at rated

■ 测试环境 Condition of test

如果没有其他规定，标准的测试、检验环境条件如下所示：

环境温度：10℃~35℃

相对湿度：≤80% RH

大气压力：860mbar~1060mbar

如果对测试结果有异议，可以在以下条件测试:

环境温度：20±2℃

相对湿度：45%RH~60%RH

大气压力：860mbar~1060mbar

Unless otherwise specified,the standard range of atmospheric conditions for making measurements and tests are as follows:

Ambient temperature ： 10℃ to 35℃

Relative humidity ：≤80% RH

ir pressure：860mbar~1060mbar

If there may be doubt on the results, measurements shall be made within the following limits:

Ambient temperature ： 20±2℃

Relative humidity：45%RH~60%RH

Air pressure ： 860mbar~1060mbar

■ 试验方法及要求 Tests

项目 Item	试验条件 Test Conditions	性能要求 Performance	
浪涌电压 Surge Voltage	温度 15~35℃，施加额定浪涌电压，充电 30 秒，放电 5 分 30 秒，共循环 1000 次。 At 15~35℃，applying Surge Voltage 1000 cycles of 30s on and 330s off。	无可见损伤 No visible damage	
		ΔC/C	≤± 10 %
		tgδ	≤初始规定值 Not more than specified value
		I	≤初始规定值 Not more than specified value
耐久性 Load Life	试验温度： 105 ±2℃， 施加额定温度电压和额定纹波电流。 Application of the rated voltage and the rated ripple current, Test temperature: 105 ±2℃ 试验时间Test time: 12000 hours	ΔC/C	± 20 %初始测量值以内 Within ± 20 % of initial value
		DF tgδ	≤200%初始规定值 Not more than 200% of specified value
		LC	≤初始规定值 Not more than specified value
贮存 Shelf Life	105℃，1000 小时。试验后：恢复24小时 1000 hours at +105℃.After test:UR to be ＞24h before measurement.	ΔC/C	± 20 %初始测量值以内 Within ± 20 % of initial value
		tgδ	≤200%初始规定值 Not more than 200% of specified value
		I	≤200%初始规定值 Not more than 200% of specified value
可焊性 Solderability	焊料槽温度为 235±5℃， 浸渍深度占整个引出线的 95%，浸渍持续时间为 2 秒. Tank temperature ：235±5℃; Impregnating depth:≥95% of the total lead wire; Impregnating depth:2s.	引出端的镀层良好，焊料自由流动，引出端湿润。浸渍面积 95%以上附着焊锡 The lead wire is coated by tin and wet. At least 95% of Circumferential surface of the dipped portion of termination shall be covered with new solder	
耐焊接热 Resistance to soldering heat	方法：焊料槽温度为260±5℃，浸渍深度 6mm，浸渍持续时间为 10 秒。 Tank temperature:260±5℃; Impregnating depth:6mm; Impregnating time:10s.	无可见损伤 No visible damage	
		ΔC/C	≤± 10 %
		tgδ	≤初始规定值 Not more than specified value
		I	≤初始规定值 Not more than specified value
稳态湿热 Stable Humidity	试验温度:+40℃,湿度:90~95%,不施加电压240±8h at 40℃,RH 90 to 95%,240±8h no voltage applied.	无可见损伤和电解液漏出，且标志清晰 No visible damage; no leakage of electrolyte; marking legible	
		ΔC/C	≤± 5 %
		tgδ	≤初始规定值 Not more than specified value
		I	≤初始规定值 Not more than specified value
耐振性 Resistance to vibration	频率：10-55-10 Hz/分 Frequency :From 10 to 55 Hz and return to 10 Hz,shall be transferred in 1 Min Total Amplitude: 1.5 mm 条件：X. Y. Z 方向各2小时 Direction and duration of vibration :3 orthogonal directions mutually each for 2 hours Total 6 hours.	无可见损伤和电解液漏出，且标志清晰 No visible damage; no leakage of electrolyte; marking legible	
		ΔC/C	≤± 5 %

■ 试验方法及要求 Tests

<table>
<tr><th>项目 Item</th><th>试验条件 Test Conditions</th><th>性能要求 Performance</th></tr>
<tr>
<td>高低温特性
Characteristic at High and low temperature</td>
<td>电容器根据下表的次序处理
The capacitor shall be subjected in turn to the procedures specified below.
<table>
<tr><th>阶段
Step</th><th>温度
Temperater</th><th>时间
Time</th></tr>
<tr><td>1</td><td>20 ± 2℃</td><td>热平衡状态
thermal stability</td></tr>
<tr><td>2</td><td>-40 ±3℃</td><td>*2 hours</td></tr>
<tr><td>3</td><td>20 ± 2℃</td><td>热平衡状态
thermal stability</td></tr>
<tr><td>4</td><td>105 ±2℃</td><td>*2 hours</td></tr>
<tr><td>5</td><td>20 ± 2℃</td><td>热平衡状态
thermal stability</td></tr>
</table>
*电容器放置在每一温度下，待阻抗或电容量稳定后方可测试
*The capacitor should be stored at each temperature until measured impedance arestabilized。
阶段 1：测定容量，损失角正切，阻抗值，漏电流
Step 1: Measured leakage current,impedance,dissipation factor and capacitance
阶段 2：放置 2 小时后，达到热平衡状态再测.
Step 2 : After the capacitor being stored for 2 hours, impedance shall be Measured. The measurement shall be made at thermal stability.
阶段 4：放置 2 小时后，达到热平衡状态再测
Step 4 : After the capacitor being stored for 2 hours, Leakage Current shall be Measured. The measurement shall be made at thermal stability.</td>
<td>
<table>
<tr><td>阶段 2
Step 2</td><td>阻抗比（对阶段 1）
Impedance ratio</td><td>≤15</td></tr>
<tr><td>阶段 4

Step 4</td><td>漏电流

Leakage Current</td><td>≤8倍规定值
Not more than 800% of specified value</td></tr>
</table>
</td>
</tr>
</table>

■ 试验方法及要求 Tests

<table>
<tr><th>项目 Item</th><th>试验条件 Test Conditions</th><th>性能要求 Performance</th></tr>
<tr>
<td>端子强度
Terminal Strength</td>
<td>抗拉强度:
沿电容器端子引线方向施加拉力(如下表)，10±1 秒
<table>
<tr><td>引线直径Φ</td><td>0.45</td><td>0.5</td><td>0.6</td><td>0.8</td><td>1.0</td></tr>
<tr><td>拉力N</td><td colspan="2">5</td><td colspan="2">10</td><td>20</td></tr>
</table>
Tensile strength of terminal:
A static load(stated in the table above)shall be applied to the terminal in the axial direction and acting in a direction away fromthe body for 10±1 sec..
端子抗弯强度:
在电容器引线施加固定重力（如下表），然后，将电容体弯折 90°后回到原位，再向相反方向弯折 90°后回到原位。上述过程在 5 秒内完成。
<table>
<tr><td>引线直径Φ</td><td>0.45</td><td>0.5</td><td>0.6</td><td>0.8</td><td>1.0</td></tr>
<tr><td>拉力N</td><td colspan="2">2.5</td><td colspan="2">5</td><td>10</td></tr>
</table>
Bending strength of terminal:
Hang the specified dead weight(stated in the table above),then bend the body through 90°, return to the original position.
Next bend it in opposite direction through 90° with the same speed,again return to the original position.
Complete this operation in about 5 sec.</td>
<td>测定静电容量时，无接触不良，开路和短路现象,另外无机械损伤和端子损伤。
When the capacitance is measured ,there shall be no intermittent contacts or open –or short –circuiting .
There shall be no such mechanical damage etc. as terminal damage</td>
</tr>
<tr>
<td>压力释放
Pressure relief</td>
<td>直流试验
D.C. test
施加同额定电压相等的反电压。
Reversed polarity D.C. rated voltage shall be applied to the capacitor.
注:
1.试验开始 30 Min 后,防爆装置不动作时,停止试验。
2.该规定适用于铝壳直径6.3mm 以上的电容器.
Note:
1.When the pressure relief device does not open even 30 min after commencement of this test, the test may be ended.
2. This requirement applies to capacitors with a diameter of 6.3mm or more</td>
<td>防爆装置释放时，无燃烧、无爆炸或铝壳和封口材料的分离。
The pressure relief device shall open in such a way as to avoid any danger of fire or explosion of Capacitor elements .</td>
</tr>
</table>

提示: Notes:

✻温度系数不使用在寿命计算公式中,只能作为参考

Temperature coefficient is not used in life formula but for reference.

✻每升高5℃,纹波电流产生的温升使电容器的使用寿命减半,从而降低电容器的使用寿命.当实际使用中需延长寿命性能时,必须降低rms纹波电流。

The endurance of capacitors is reduced with internal heating produced by ripple current at the rate of halving the lifetime with every 5℃ rise.

When long life performance is required in actual use, the rms ripple current has to be reduced.

■铝电解电容器的使用注意事项 Guidelines For Using Aluminum Electrolytic Capacitor

为使您获得电解电容器的最佳性能和延长电解电容器的使用寿命，在使用电解电容器前，请务必阅读本注意事项。

Upon using Aluminum Electrolytic Capacitors，please proper handing and observing to following important points will insure optimum capacitor performance and long life.

❶直流电解电容器是有极性的.DC electrolytic capacitors are polarized.

确定极性，极性标志在电容器的基体上。以免因极性反可能引起电路短路或电容器损坏，当极性不固定或不确定的，使用 双极性电容器。

注意直流电解电容器不能使用于交流.

Make sure of the polarity .The polarity is marked on the body of the capacitor .Application of the reversed voltage cause a short circuit or damage to the capacitor .

Use bipolar capacitors when the polarity is not determined or unknown . Note that DC electrolytic capacitors can not be used for AC application .

❷使用电压不要大于额定电压.Do not apply voltage greater than rated voltage .

使用电压大于额定电压，漏电流会增大，可能损坏电容器。建议工作电压为额定电压的70~80%，电容器在建议的工作电压下使用可延长电容器的寿命。

IF a voltage exceeding the rated voltage is applied ,the leakage current will increase , which damage the capacitor . Recommended working voltage is 70 to 80 percent of tatted voltage . Using capacitors at recommended working voltage prolongs capacitor life .

❸不要使过大的纹波电流通过电容器.Do not allow excessive ripple current through the capacitor .

流过电容器的纹波电流超过许可值，将会引起电容器发热，电容量减少，损害电容器。通过电容器的纹波电流不要大于允许值。

The flow of ripple current over permissible ripple current will cause heat of the capacitor ,which may decrease the capacitance and damage the capacitor .

ripple current on the capacitor must be at or bellow allowable level .

❹快速的充放电电路中,使用专门设计的电容器.Use specially designed capacitors for the circuits where charge and discharge are frequency repeated .

在经受快速的周期性充放电电路中，电容器可能受损害，它的寿命因容量下降、温升等原因而缩短，在这种电路中，一定要使用专门设计的电容器。

In the circuit subjected to rapid charge cycles ,capacitors may be damaged ,its life may be shortened by capacitance decrease ,heat rise , ect .

Be sure and use special capacitors in these applications .

❺工作温度范围.Operating temperature range .

电容器的特性随工作温度而变化，在温度较高的情况下，容量、漏电流增大，tgδ 减少；在低温情况下，容量和漏电流下降，tgδ 增大。

电容器在较低的温度下使用会确保延长寿命。

The characteristics of capacitors change with the operating temperature .The capacitance and leakage current increase and decrease at higher temperatures .

The capacitance and leakage current decrease and tgδ increase lower temperature .Usage at lower temperature will ensure longer life .

❻核对工作频率.Check operating frequency .

电解电容器的容量通常是在 100Hz 或 120Hz 下测得的。然而要记住容量随频率的升高而下降，tgδ 随频率的升高而增大，并使周围温度升高。

The capacitance of electrolytic capacitors is usually measured at 100Hz or 120Hz . However , remember that capacitance decrease and tgδ increase as the applied frequency becomes higher whereas the ambient temperature becomes higher .

❼长时间存放的电容器，在使用前加额定直流电压处理. Apply rated DC voltage treatment to the capacitors which have been stored for a long time

长时间的存放，实际对电容器的容量和 tgδ 没有多大的影响，然而往往会使漏电流增大，耐压降低。长时间存放后的电容器处理，首先逐渐施加直流电压至额定电压，然后再使用。

Long periods of storage have virtually no effect no a capacitor's capacitance and tgδ.Such periods tend however ,to increase leakage current and decrease withstand voltage .After removing capacitors from long-duration storage ,first apply a gradually increasing DC voltage to rated voltage and then use them.

❽电容器外壳与阴极端是不绝缘的.The capacitor case is not insulated from the cathode terminal .

电容器外壳与阴极端是通过电解液连接的，如果电容器的外壳必须与线路绝缘，则电容器的安装位置处，一定要采取绝缘出措施。

The capacitor's case and cathode terminal connect through the electrolyte.If the case is to be completely insulated,that insulation must be at the capacitor's mounting point.

❾电容器的端子或引线上不要施加过大的力.Do not apply excessive force to the terminals and leads.

过大的力施加到端子和引线上，可能引起引线的断裂或端子分裂，转而会引起内部连接的破坏。

The excessive strong force applied to the terminals and lead wires may cause leads to break or terminals to separate and ,in turn ,cause the internal contact to fail.

❿关于焊接以后的清洗. Cleaning after soldering

① 电容器不能用卤化有机物系列的清洗剂进行清洗。如果必须进行清洗，请使用能够保证电容器质量的清洗剂。

The aluminum electrolytic capacitors should be free of halogenated solvents during board cleaning after soldering. Use solvent proof capacitors when halogenated solvents are used.

② 请不要让固定剂及镀层（涂层剂）将电容器封口部位（端子一侧）全部封住。

Do not cover up all the sealing area of capacitors with adhesives、fixative or coating materials (coating agent), make coverage only partial.

■ 包装Packing

尺寸	每袋数量（PCS）	一箱数量（PCS）	袋数（包）	尺寸	每袋数量（PCS）	一箱数量（PCS）	袋数（包）
3/4*5~6	1000	50000	50	10/10.2*14~18	300	5400	18
4*7~11 5/5.5*5~8	1000	40000	40	10/10.2*19~26	300	4200	14
5/5.5*9~12	1000	25000	25	10/10.2*28~39	150	3000	20
5/5.5*13~18	1000	18000	18	10/10.2*40~49	150	2400	16
6.3*5~6	1000	30000	30	10/10.2*50~55	150	2100	14
6.3*7~8	1000	20000	20	12.5/13*13~19	150	3000	20
6.3*9	1000	18000	18	12.5/13*20~24	150	2400	16
6.3*10~12	1000	16000	16	12.5/13*25~30	150	2100	14
6.3*13~14	1000	14000	14	12.5/13*31~35	150	1800	12
6.3*15~18	1000	13000	13	12.5/13*36~42	100	1600	16
8/8.2*7~8	500	15000	30	12.5/13*45~50	50	900	18
8/8.2*9~13	500	10000	20	16*16~23	100	1600	16
8/8.2*14~15	500	9000	18	16*24~27	100	1400	14
8/8.2*16	500	8000	16	16*28~34	50	1000	20
8/8.2*18	500	7000	14	16*35~38	50	900	18
8/8.2*20~24	500	6000	12	16*40~45	50	700	14
8/8.2*25	300	4200	14	16*46~50	50	600	12
10/10.2*7~10	300	7500	25	18*16~34	50	1000	20
10/10.2*11~13	300	6000	20	18*35~40	50	800	16
				18*42~50	50	600	12

