REV.	ECN NO.	DESCRIPTION	DRAW	DATE

Electrical Characteristics
1.1 Impedance: 50 Ohms
1.2 Operating Frequency: DC-6GHz
1.3 S.W.R.: ≤ 1.5
1.4 Operating Voltage: 170V/Max
1.5 Insulation Resistance: ≥ 1000 MΩ

Operating Temperature
2.1 Operating Temperature Range: -45℃ ~ +125℃

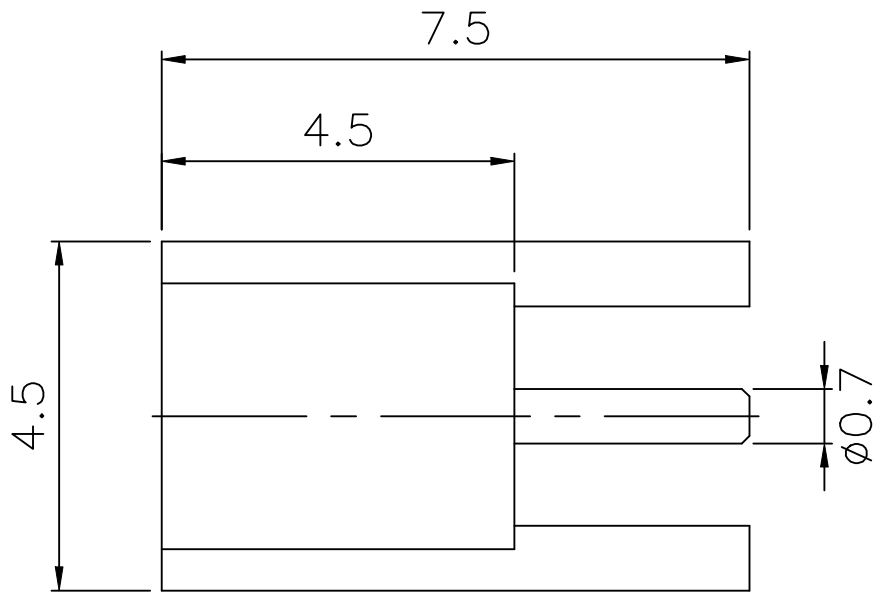

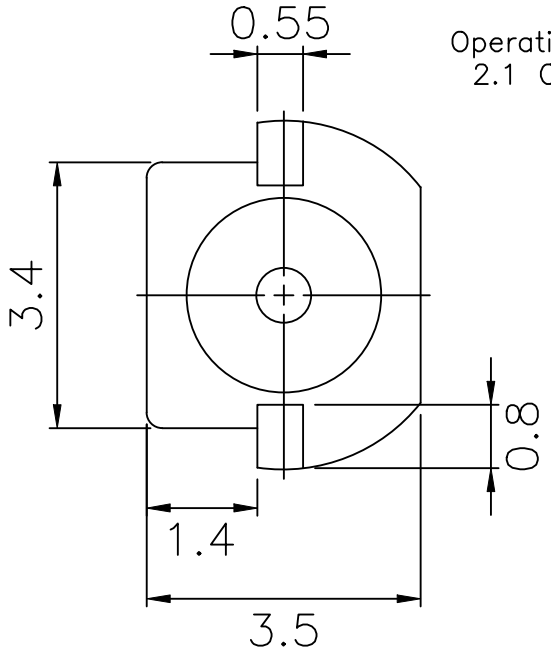

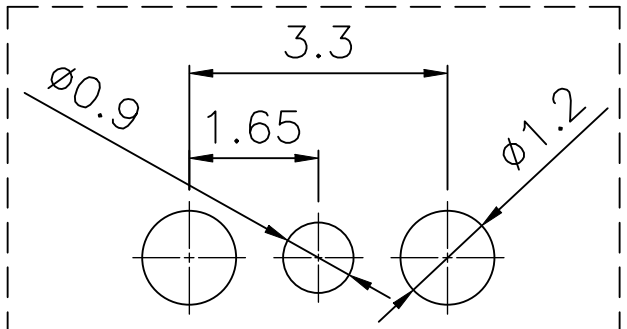

建议PCB尺寸

No.	规格/描述	材质	外观处理	数量/单位
3	胶 芯	PTFE	白 色	1
2	中心针	磷青铜	镀 金	1
1	本 体	黄 铜	镀 金	1

COSTOMER DRAWING			深圳市莱联电子有限公司 SHENZHEN LAILIAN ELECTRONICS CO.,LTD		
DRAWING			TITLE	MMCX连接器直插L4.5	REV. A
CHECK			PART NO.	LAIL-MMCX-P3.3-L4.5-L	UNITS mm
APPROVAL			DWG.NO.		Projection
TOLERANCES ARE					
30-150	±0.35	ANGLE			
10-30	±0.2				
5-10	±0.15	±3°			
0-5	±0.1				