REV.	ECN NO.	DESCRIPTION	DRAW	DATE

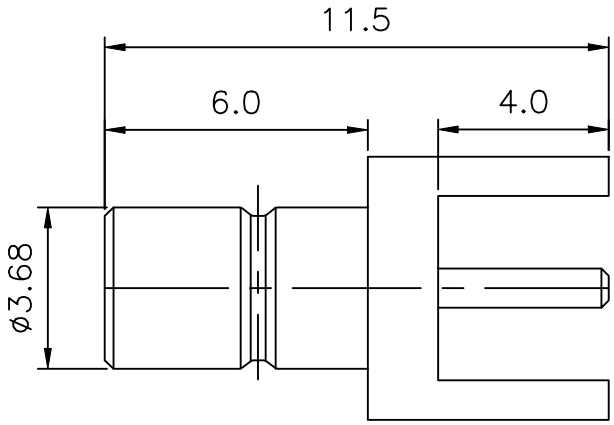

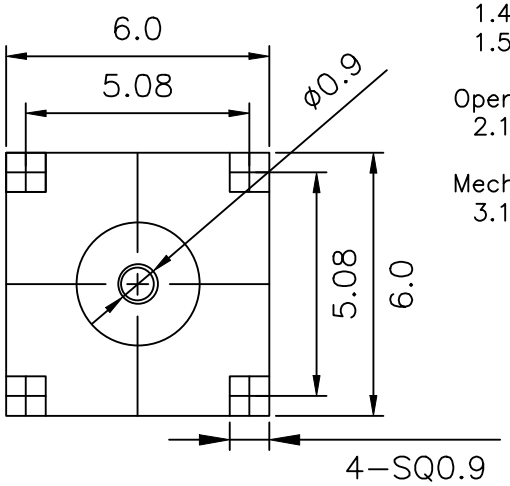

Electrical Characteristics
- 1.1 Impedance: 50 Ohms
- 1.2 Operating Frequency: DC-3 GHz
- 1.3 S.W.R.: ≤ 1.5
- 1.4 Operating Voltage: 335V/Max
- 1.5 Insulation Resistance: ≥ 1000 MΩ

Operating Temperature
- 2.1 Operating Temperature Range: -45℃ ~ +125℃

Mechanical Properties
- 3.1 Number of insertions and extractions ≥ 500 times

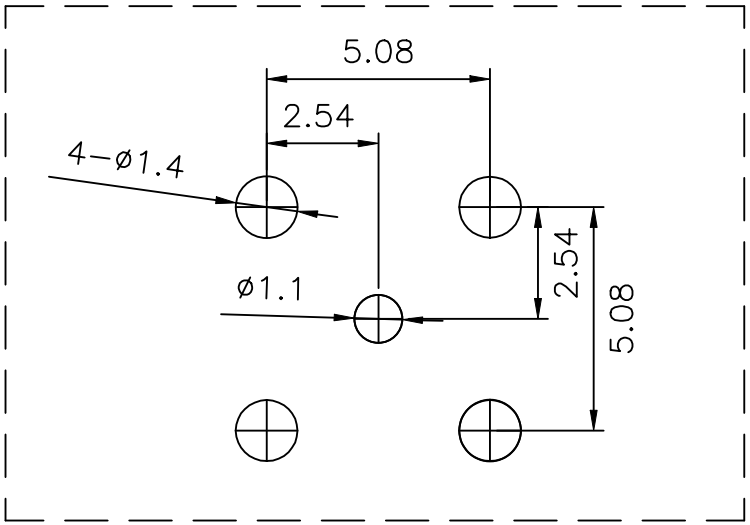

建议PCB尺寸

No.	规格/描述	材质	外观处理	数量/单位
3	中心针	黄 铜	镀2u″ 金	1
2	胶 芯	PTFE	白 色	1
1	本 体	黄 铜	镀2u″ 金	1

COSTOMER DRAWING			LAILAN 深圳市莱联电子有限公司 SHENZHEN LAILIAN ELECTRONICS CO.,LTD		
DRAWING					
CHECK					
APPROVAL					
TOLERANCES ARE			TITLE	SMB连接器公头PIN距5.08L6.0（直插）	REV. A
30-150	±0.35	ANGLE	PART NO.	LAIL-SMB-P5.08-L6.0-L	UNITS mm
10-30	±0.2				
5-10	±0.15	±3°	DWG.NO.		Projection
0-5	±0.1				