承　　认　　书

SPECIFICATION FOR APPROVAL

CUSTOMER			
CUSTOMER'S P/N			
DATE	27/Mar/2025	REVISION NO.	A
PART NO.	CKNRS201610Z　　Series		
DRAWN NO.			
DESCRIPTION.	SMD POWER INDUCTOR		
Customer's Signature			

Approved by	Checked by	Drawn by
黄大燕	黄大燕	林树英
27/Mar/2025	27/Mar/2025	27/Mar/2025

广 东 今 凯 电 子 科 技 有 限 公 司

GUANG DONG CHK ELECTRONIC TECH Co., Ltd

广东省佛山市顺德区北滘万洋科创园二区3栋

Building 3, District 2, Beijiao Wanyang Science and Technology Innovation Park, Shunde District, Foshan City,

www.gzchk.com

RoHS Compliance

广 东 今 凯 电 子 科 技 有 限 公 司

GUANG DONG CHK ELECTRONIC TECH Co., Ltd

ECN HISTORY LIST

REV	DATE	DESCRIPTION	CHECK	APPROVED
A	2025/3/27	新作成	林树英	黄大燕

广 东 今 凯 电 子 科 技 有 限 公 司

GUANG DONG CHK ELECTRONIC TECH Co., Ltd

CUSTOMER	0	REVISION NO.	A
CUSTOMER'S P/N	0	PAGE	P 1/8
DESCRIPTION.	SMD POWER INDUCTOR	DRAWN NO.	0
PART NO.	CKNRS201610Z Series	DATE	2025/3/27

1.SHAPE & DIMENSION

UNIT: mm

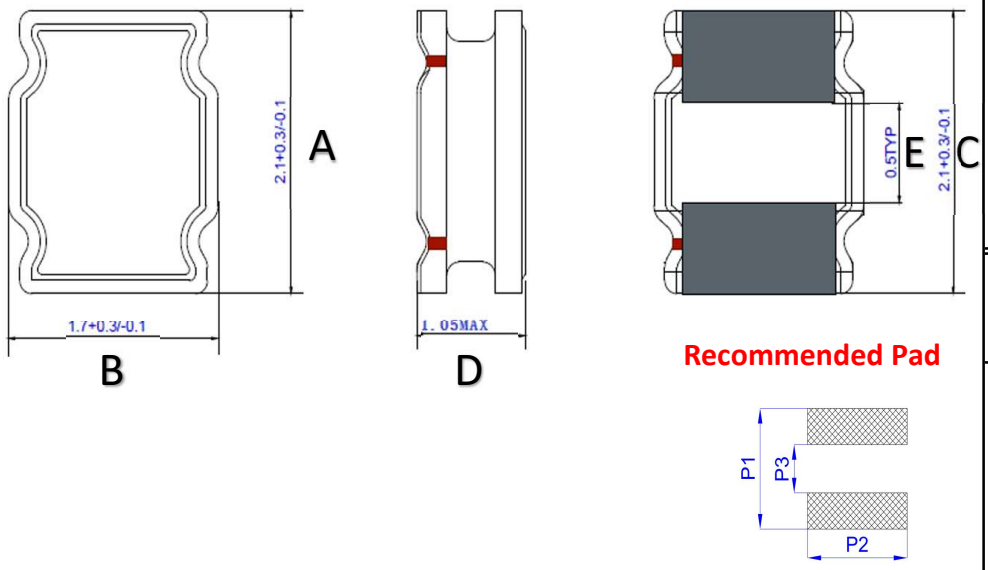

SCHEMATICS

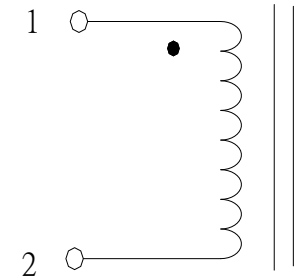

MARKING COLOR

NA

A	B	C	D	E	P1	P2	P3
2.1	1.7	2.1	1.05	0.92	2.4	1.8	0.8
0.3/-0.1	0.3/-0.1	0.3/-0.1	MAX	±0.05	Ref.	Ref.	Ref.

备注：R24/R33/R47/R68高度为1.1mmMAX

PART NUMBERING SYSTEM

CK NRS 201610 Z - 2R2 M C

1 2 3 4 5 6 7

1 **CHK PRODUCTION (今凯制造)**

2 **PRODUCT CATEGORY （产品种类）** **NR-镍锌 NRS-合金**

3 **DIMENSIONS （尺寸规格）**

4 **MAERTIAL TYPE （材料类型） A-四边 B-八边 Z-十二边**

5 **INDUCTANCE （电感量）**

6 **TOLERANCE （公差） M:±20% N:±25% Y:±30%**

7 **PACKAGING （包装方式） C - 编带盘装 B - 盒装**

APPROVED BY	CHECKED BY	DRAFT BY
黄大燕	黄大燕	林树英

CUSTOMER	0	REVISION NO.	A
CUSTOMER'S P/N	0	PAGE	P 2/8
DESCRIPTION.	SMD POWER INDUCTOR	DRAWN NO.	0
PART NO.	CKNRS201610Z Series	DATE	2025/3/27

2.SERIES SPECIFICATION

◆ CKNRS201610Z Series Specification:

Part Number	Inductance	Test Freq	DCR(mΩ)		Saturation Current (A)		Temp.Rise Current (A)	
	(μH)	(Hz)	Max	Typ	Max	Typ	Max	Typ
CKNRS201610Z-R24YC	0.24	1MHz/1V	33	27	7.60	8.60	4.00	5.00
CKNRS201610Z-R33YC	0.33		50	39	4.50	6.00	3.50	4.20
CKNRS201610Z-R47YC	0.47		65	47	3.30	5.00	3.00	3.50
CKNRS201610Z-R68YC	0.68		75	60	3.00	4.00	2.30	3.00
CKNRS201610Z-1R0YC	1.00		120	99	2.50	3.60	2.00	2.50
CKNRS201610Z-1R5YC	1.50		150	115	1.90	2.70	1.90	2.30
CKNRS201610Z-2R2MC	2.20		180	143	1.80	2.10	1.60	2.00
CKNRS201610Z-3R3MC	3.30		310	259	1.70	1.90	1.40	1.60
CKNRS201610Z-4R7MC	4.70		425	374	1.20	1.50	1.00	1.20
CKNRS201610Z-6R8MC	6.80		600	475	1.10	1.30	0.95	1.20
CKNRS201610Z-100MC	10.0		826	776	0.80	1.00	0.80	0.90

◆TEST CONDITION

ITEM	TEST CONDITION	TEST INSTRUMENTS
L	1MHz/1V	Microtest 6377
Isat		TH1773+Microtest 6377
Irms		
DCR	25±5℃	TH2512B

*The operating temperature is 25℃

*Isat: For Inductance drop 30% from its value without current

*Irms: The value of D.C current when the temperature rise is △T≦40℃.(Ta=25℃)

*For CKNRS201610Z Series size inductors,absolute maximum voltage: DC 25 V.

※此物料仅用于消费电子领域，若用于车载，航天，军事领域引起的一切品质和责任问题，我司既不承担※

APPROVED BY	CHECKED BY	DRAWN BY
黄大燕	黄大燕	林树英

CUSTOMER	0	REVISION NO.	A
CUSTOMER'S P/N	0	PAGE	P 3/8
DESCRIPTION.	SMD POWER INDUCTOR	DRAWN NO.	0
PART NO.	CKNRS201610Z Series	DATE	2025/3/27

3.MATERIAL LIST & GENERAL SPECIFICATION

材料名称	型号及规格	制造商	环保要求	备注
ITEM	Materials	Manufacturer	EN.QU	Note
磁芯1（Drum Core)	合金（Alloy）	MG	RoHS	Primary
铜线（Wire）	Polyester Wire or equlvalent	ELEKTRISOLA	RoHS	
胶水（Glue)	Phenolic epoxy resin	CH	RoHS	
锡（Solder)	107H	QD	RoHS	Primary
锡（Solder)	107H	TF	RoHS	Alternative

GENERAL SPECIFICATION	
Electrical specifications ：	at 20~25℃
Operation Temperature：	-40~+125℃
Storage Temperature：	-40~+125℃

APPROVED BY	CHECKED BY	DRAWN BY
黄大燕	黄大燕	林树英

广 东 今 凯 电 子 科 技 有 限 公 司

GUANG DONG CHK ELECTRONIC TECH Co., Ltd

CUSTOMER	0	REVISION NO.	A
CUSTOMER'S P/N	0	PAGE	P 4/8
DESCRIPTION.	SMD POWER INDUCTOR	DRAWN NO.	0
PART NO.	CKNRS201610Z Series	DATE	2025/3/27

4.PACKAGING(unit: mm)

1.包装类型 **2.包装尺寸** □ 13″ 盘 ■ 7″ 盘

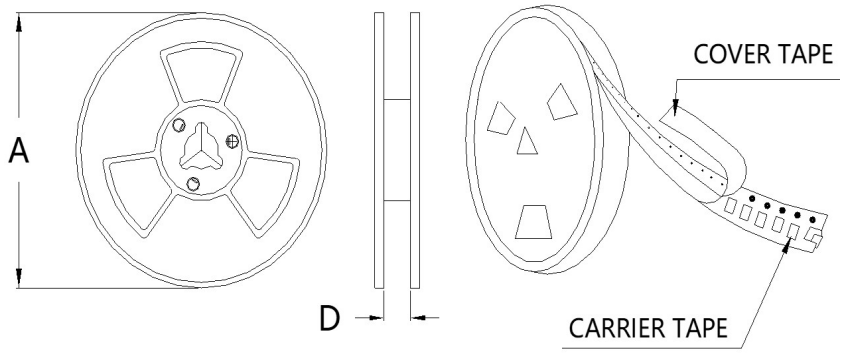

	13″ 盘	7″ 盘
A	Φ330±2.0	Φ178±2.0
D	8.4	

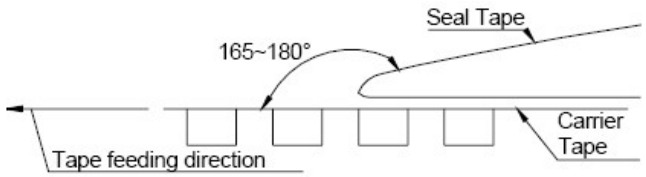

Peel-off strength:10～100gf.
Peel-off angle:165°-180°
Peel-off speed:300mm/min.

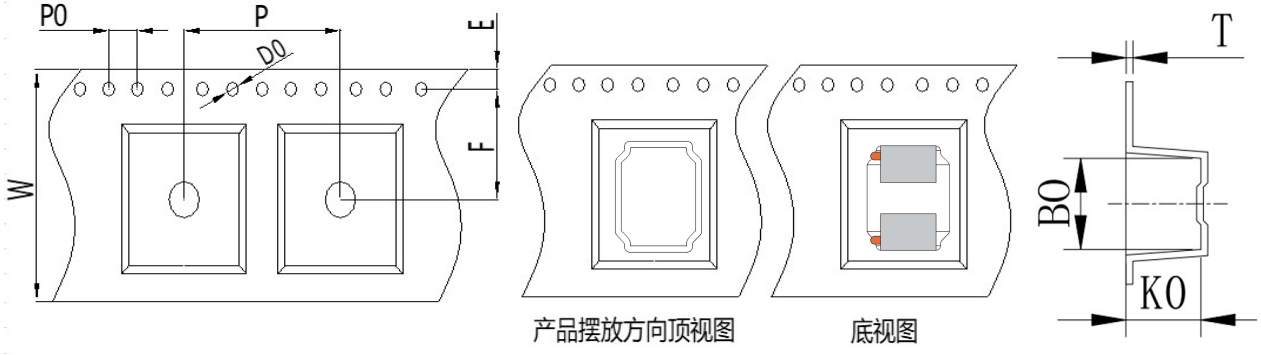

Item	W	B0	P	T	E	F	D0	P0	K0	
DIM(mm)	8.0±0.3	2.4±0.1	4.0±0.1	0.3±0.05	1.75±0.1	3.5±0.1	1.5±0.1	4.0±0.1	1.3±0.1	

APPROVED BY	CHECKED BY	DRAFT
黄大燕	黄大燕	林树英

广 东 今 凯 电 子 科 技 有 限 公 司
GUANG DONG CHK ELECTRONIC TECH Co., Ltd

CUSTOMER	0	REVISION NO.	A
CUSTOMER'S P/N	0	PAGE	P 5/8
DESCRIPTION.	SMD POWER INDUCTOR	DRAWN NO.	0
PART NO.	CKNRS201610Z Series	DATE	2025/3/27

5. CARTON

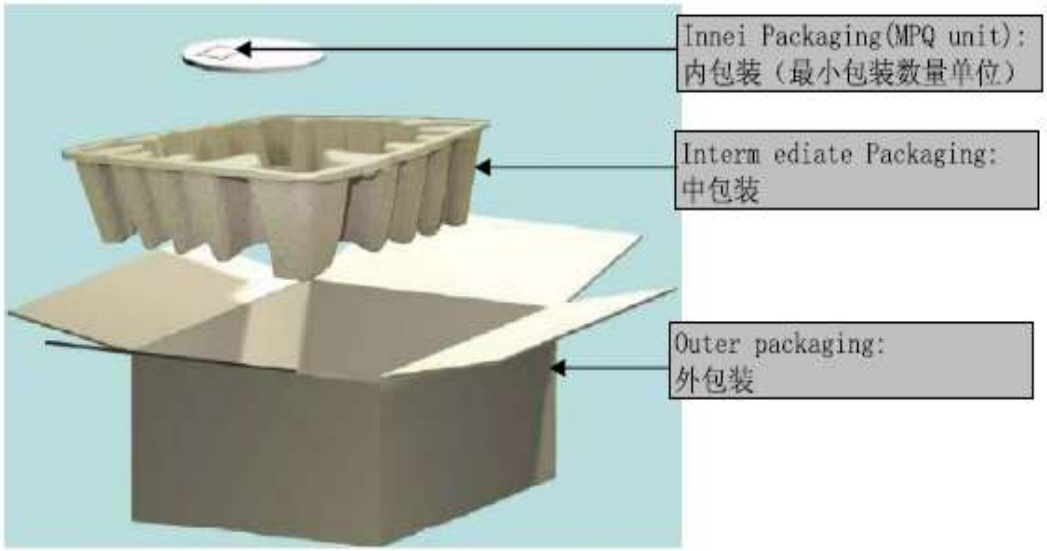

1.1 外箱: 40*40*17 cm 一纸托装一箱
1.2 内箱: CAG002(装7寸卷盘TRAY盘)
1.3 外箱材質: A三A
1.4 内箱材質: A=A
1.5 每10卷制品用一只静电袋包装
1.6 每一静电袋内放一只袋干燥剂
1.7 每一卷上面依标签样式的要求贴上标签明细
1.8 出货内外箱贴上该箱内实际内容明细
1.9 出货标签规格如下: 尺寸=长度:39mm 宽度:29mm
(如: 客户有特殊要求时，则依客户要求实施.)

卷轴包装数量		
每卷	2000	PCS

外箱包装数量				
每箱	40	卷,共	80000	PCS

储存条件及期限：
温度：20-25℃
湿度：≦70%
时间：六个月

APPROVED BY	CHECKED BY	DRAFT
黄大燕	黄大燕	林树英

CUSTOMER	0	REVISION NO.	A
CUSTOMER'S P/N	0	PAGE	P 6/8
DESCRIPTION.	SMD POWER INDUCTOR	DRAWN NO.	0
PART NO.	CKNRS201610Z Series	DATE	2025/3/27

6. RELIABILITY TEST

Test Items		Test Conditions	Criteria
1	Low temperature storage	Placed at -40℃ for 500 hours, then measured at room ambient temperature after placing 24hours	Inductance shall be within ±10% of the initial value.
2	High temperature storage	Placed at +125℃ for 500 hours, then measured at room ambient temperature after placing 24 hours	Inductance shall be within ±10% of the initial value.
3	Thermal shock	Condition for 1 cycle: -40℃,30min.~+125℃,30min Number of cycles:5	Inductance shall be within ±10% of the initial value.
4	Humidity resistance	Placed at 90 to 95%RH,+50℃ for 500 hours, then measured at room ambient temperature after placing 24 hours.	Inductance shall be within ±10% of the initial value. Insulation resistance > 100MΩ at DC
5	Drop	Drop specimen three times on concrete floor from a height of 1 meter which mounted on test board	Inductance shall be within ±10% of the initial value.
6	Vibration	Frequency::10~55~10Hz Amplitude:1.5mm or 10G Sweep time: 1 oct/min Test Directions: X,Y,Z Test Time: 2 hours each direction	Inductance shall be within ±10% of the initial value.
7	Terminal strength	Add static load 4.9N(500gf) to inductor through hole of test board for 10±2 sec.	No detachment of terminal pin and no breakage of wire
8	Soldering heat resistance	Dip Inductor's terminal in solder bath of following conditions: 1) 260±5℃, 10±1 sec, 2) 350±10℃, 3.5±0.5 sec	Inductance shall be within ±10% of the initial value. Apperance: No damage

APPROVED BY	CHECKED BY	DRAFT
黄大燕	黄大燕	林树英

CUSTOMER	0	REVISION NO.	A
CUSTOMER'S P/N	0	PAGE	P 7/8
DESCRIPTION.	SMD POWER INDUCTOR	DRAWN NO.	0
PART NO.	CKNRS201610Z Series	DATE	2025/3/27

7. SOLDERING CONDITIONS

Applicable soldering process to the products is refl.

9.1 Soldering Materials

(1) Solder:Sn-3.0Ag-0.5Cu

(2) Flux:Use rosin-based flux,but not strongly acidic flux (with xhlorine exceeding 0.2wt%).Do not use water-soluble flux.

9.2 Reflow Soldering Profile

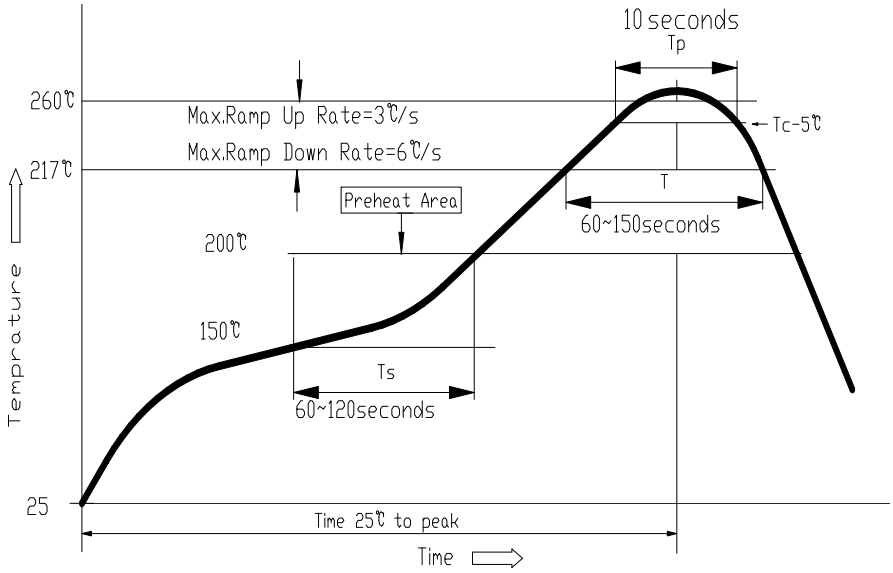

9.3 Soldering Iron

Reworking with electric solding iron must preheating at 150℃ for 1 minute is required,and do not directly touch the core with the tip of the soldering iron.The reworking soldering conditions are as follows.

①Temperature of soldering iron tip:350℃；

② Soldering iron power output:≤30W；

③ Diameter of soldering iron end:≤1.0mm；

④Soldering time:＜3 s



APPROVED BY	CHECKED BY	DRAFT
黄大燕	黄大燕	林树英

CUSTOMER	0	REVISION NO.	A
CUSTOMER'S P/N	0	PAGE	P 8/8
DESCRIPTION.	SMD POWER INDUCTOR	DRAWN NO.	0
PART NO.	CKNRS201610Z Series	DATE	2025/3/27

8.Appearance of the standard

1.Void appearance tolerance limit

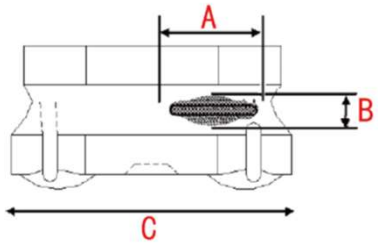

Size of voids occurring to coating resin is specified below.

①Width direction(dimension A) Acceptable when A<=C/2

Nonconforming when B>=C/2

②Length direction(dimension B):Dimension b is not specified

③When total area of voids (including one exposing coil) occurring to each sides is not greater than 50% of coating resin area,that is acceptable.

2.External appearance criterion for exposed wire

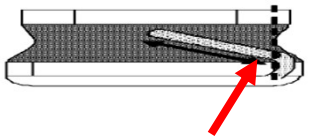

Exposed end of the winding wire at the secondary side should be 3.0mm and below.

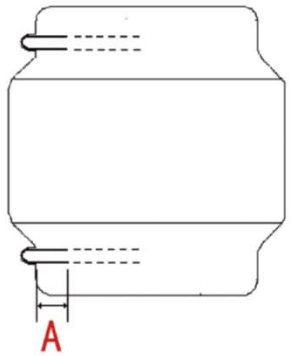

①Acceptable when A<=0.8mm

②Nonconforming when A>0.8mm

APPROVED BY	CHECKED BY	DRAFT
黄大燕	黄大燕	林树英