DATASHEET

AS77H-010KG-00

AIoTSensing Inc.
Website: http://www.aiotsensing.com

History of Revision

Datasheet Rev.	Date	Note
00	Oct/12/2019	Draft
01	Nov/28/2024	Released

CONTENTS

1. Overview....4
1.1 Features....4
1.2 Applications....4
1.3 Descriptions....4
1.4 Block Diagram....5
2. Electrical Specifications....5
2.1 Pressure and Temperature Characteristics....5
2.2 Electrical Characteristics....6
2.3 Absolute Maximum Rating....7
3. Function Descriptions....7
3.1 General Description....7
3.2 Factory Calibration....7
3.3 Sensor Output Conversion....7
3.4 Serial Interface....7
4. Registers....8
4.1 Normal Registers....8
4.2 OTP Registers....9
5. High-Speed I²C Digital Output Interface....9
5.1 I²C Specification....9
5.2 I²C Device Address....10
5.3 I²C Protocol....11
6. SPI Interface....13
6.1 Interface Specification....13
6.2 SPI Protocol....14
7. Application Circuit....15
7.1 I²C Interface....15
7.2 SPI Interface....15
8. Package Outline and Pin Configuration....16
9. Recommended Pad Layout....16
10. Shipping Package....17
11. Soldering Recommendation....18
12. Legal Disclaimer....19

1. OVERVIEW

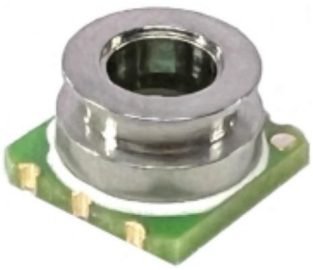

1.1 Features

- High resolution module, 1.5 Pa
- Supply voltage: 1.8V to 5.5V
- Operating range:0 to 10kPa, -40 to +85℃
- Integrated digital pressure sensor (24-bit ADC)
- Excellent long-term stability
- Standby current<0.2μA @ 25°C
- No external components (Internal oscillator)
- High-Speed I2C and SPI output is in selection
- Size: 6.8 x 6.2 x 3.7 mm

1.2 Applications

- Nature Gas Pressure Measurement
- Adventure and Sports Equipment
- Pipe Pressure measurement
- Water Proof Pressure measurement

1.3 Descriptions

The AS77H-010KG-00 employs a MEMS pressure sensor with an I²C interface to provide accurate temperature, pressure data. The sensor pressure and temperature outputs are digitized by a high resolution 24-bit ADC. Data compensation is integrated internally to save the effort of the external host MCU system. Pressure output can be resolved with output in fractions of Pascal. Package is surface mount with a plastic cap and is RoHS compliant.

Sensor Performances (VDD = 3.3 V)				
Pressure	Min	Typ.	Max	Unit
Range	0		10	kPa
ADC		24		bit
Resolution		1.5		Pa
Accuracy@25°C（0 to10 kPa）	-0.2		+0.2	kPa
Accuracy@-25°C to 50°C（0 to 10kPa）	-0.25		+0.25	kPa
Response time@ OSR=1024		3.0*2		ms
Long term stability		±0.1		kPa/yr

1.4 Block Diagram

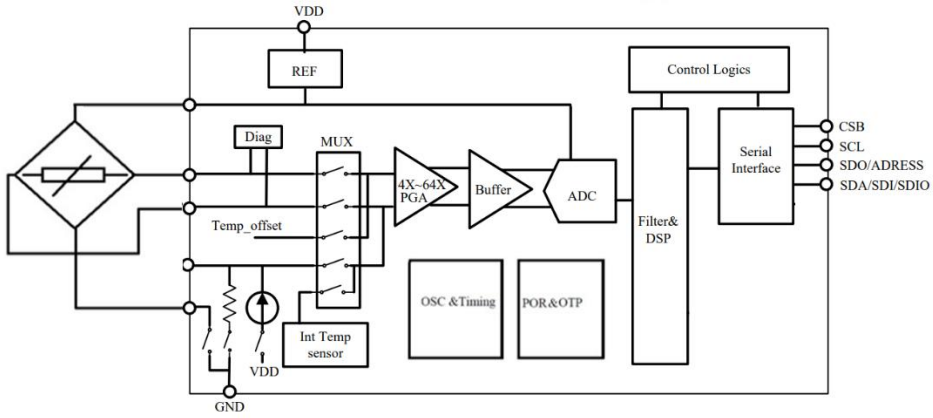

Figure 1: Functional Block Diagram

2. Electrical Specifications

2.1 Pressure and Temperature Characteristics

Table1: Pressure Output Characteristics @ VDD = 3.3V, T = 25°C unless otherwise noted

Parameter	Symbol	Conditions	Min	Typ	Max	Unit
Operating Pressure Range	P_{FS}	Full Accuracy	0		10	kPa
Extended Pressure Range	P_{ext}	Linear Range of ADC	0		16	kPa
Absolute Accuracy		at 25°C, 0 to 10 kPa at -25..60°C, 0..10 kPa	-0.2 -0.25		+0.2 +0.25	kPa kPa
Resolution RMS				0.03		kPa
Long Term Drift		After a period of 1 year		±0.1		kPa/yr

(1) The long-term stability is measured with non-soldered devices.

(2) Reflow soldering impact ±2.5 mbar.

(3) Recovering time after reflow (Time to recover at least 80% of the reflow impact) 5 days.

Table2: Temperature Output Characteristics @ VDD = 3.3V, T = 25°C unless otherwise noted

Parameter	Symbol	Conditions	Min	Typ	Max	Unit
Operation Temperature Range	T_{OP}		-40	25	85	℃
Temperature Absolute Accuracy		25℃		0.5	+0.8	℃
Temperature Absolute Accuracy		-25℃ to +60℃		1		℃
Temperature Resolution of Output Data				0.01		℃

2.2 Electrical Characteristics

Table3: DC Characteristics @VDD=3.3 V, T=25℃ unless otherwise noted

Parameter	Symbol	Conditions	Min	Typ	Max	Unit
Operation Supply Voltage	V_{DD}		1.8	3.3	5.5	V
Operation Temperature	T_{OP}		-40		85	℃
Supply Current @25°C on during conversion	I_{BDD}_pga on	PGA on (Gain>=4)		1.8		mA
Conversion time	Tc	OSR 32768 16384 8192 4096 2048 1024 512 256		43.0 35.0 12.0 7.0 4.0 3.0 2.0 2.0		ms
Supply current (1 sample per sec.)	Idd	OSR 32768 16384 8192 4096 2048 1024 512 256		77.4 63.0 21.6 12.6 7.2 5.4 3.6 3.6		uA
Standby Supply Current	I_{DDSTB}	At25℃		0.1	0.2	μA
Serial Data Clock Frequency	f_{SCLK}	I^2C protocol, pull-up resistor of 4k7~10k		100	400	kHz
Digital Input High Voltage	V_{IH}		0.8			V
Digital Input Low Voltage	V_{IL}				0.2	V
Digital Output High Voltage	V_{OH}	IO=0.5mA	0.9			V
Digital Output Low Voltage	V_{OL}	IO=0.5mA			0.1	V
Input Capacitance	C_{IN}			4.7		pF

（1）Standard Product. Could be customized.

2.3 Absolute Maximum Rating

Table4: Absolute Maximum Rating

Parameter	Symbol	Conditions	Min	Typ	Max	Unit
Overpressure	P_{MA}				1	bar
Supply Voltage	V_{DD}		-0.3		5.5	V
Interface Voltage	V_{IF}		-0.3		VDD+0.3	V
Storage Temperature Range	T_{STG}		-40		85	℃
Maximum Soldering Temperature	T_{MS}	40 second maximum			250	℃
ESD Rating		Human body model	-2		+2	kV
Latch-up Current		At 85℃	-100		100	mA

Stresses above those listed as “absolute maximum ratings” may cause permanent damage to the device. This is a stress rating only and functional operation of the device under these conditions is not implied. Exposure to maximum rating conditions for extended periods may affect device reliability.

3. Function Descriptions

3.1 General Description

The AS77H-010KG-00 consists of a piezo-resistive sensor and a sensor interface I^2C. The main function of the I^2C is to convert the uncompensated analogue output voltage from the piezo-resistive pressure sensor to a 24-bit digital value, as well as providing a 16-bit digital value for the temperature of the sensor, and compensates them by a patented algorithm. The fully-compensated values can be read out by external MCU.

3.2 Factory Calibration

Every sensor is individually factory calibrated for sensitivity and offset for both of the temperature and pressure measurements, further calibrations are not necessary to be done by the user. The OTP registers are used to store the configurations and calibration coefficients for the sensor.

3.3 Sensor Output Conversion

For each pressure measurement, customer used to send a conversion command to the sensor, read back the conversion data from the normal register to be stored from 0x06 to 0x0a, the pressure data is stored from 0x06 to 0x08, the highest bit is sign bit, the temperature data is stored from 0x09 to 0x0a, the highest bit is sign bit. All the data are sent starting from the MSB.

3.4 Serial Interface

The AS77H-010KG-00 provides both SPI and I^2C interface for serial communication and ‘CSB’ pin is used to switch between these two protocols. Pulling ‘CSB’ pin low selects the SPI interface, leaving ‘CSB’ pin float or puling it high selects the I^2C interface.

PIN CSB	MODE	PIN USED	NOTE
Float	I2C	SDA, SCL	
Low	SPI	SDI, SDO, SCK	Default 3SPI

4. REGISTERS

All the registers can be departed into normal registers and OTP registers. The normal registers are used to send a conversion command to the Sensor, read back the conversion data and perform the OTP blowing. The OTP registers are used to store the configurations and calibration coefficients for the Sensor, whose default values can be programmed by the inside OTP banks.

4.1. NORMAL REGISTERS

Table4.1 normal registers

Addr	Description	R/W	Bit7	Bit6	Bit5	Bit4	Bit3	Bit2	Bit1	Bit0	Default
0x00	SPI _Ctrl	RW	SDO_active	LSB_first	Softreset			Softreset	LSB_firs	SDO_active	0x00
0x01	Part_ID	R	PartID								0x00
0x02	Status	R	Error_code						1'b0	DRDY	
0x06	DATA_MSB	R	Data out[23:16]								0x00
0x07	DATA_CSB	R	Data out[15:8]								0x00
0x08	DATA_LSB	R	Data out[7:0]								0x00
0x09	TEMP_MSB	R	Temp out[15:8]								0x00
0x0A	TEMP_LSB	R	Temp out[7:0]								0x00
0x30	CMD	RW	Sleep_time[3:0]				Sco	Measurement_ctrl]2:0]			0x00

Reg0x00

SDO_active: 1: 4-wire SPI, 0: 3-wire SPI

LSB_first: 1: LSB first for SPI interface, 0: MSB first for SPI interface

Soft_reset: 1: Reset all the NSA2300 registers (except 'margin'), automatically come back to 0 after reset complete.

Reg0x01

PartID: OTP programmed 8 bits Part ID, corresponding to OTP register Reg0xA4. Read only from the address 0x01.

Reg0x02

DRDY： 1, indicates once conversion complete, and the output data is ready for reading.

Error_code: When diagnostic function enabled, These bits stores the error information.

Error_code[3]: VINP short to VDD

Error_code[2]: VINP short to GND

Error_code[1]: VINN short to VDD

Error_code[0]: VINN short to GND

Reg0x06-Reg0x08

Data_out: 24 bits ADC output data when 'raw_data_on' = 0 with an LSB equals to (1/2^23)*(VEXT-PSW). 24 bits calibrated data when 'raw_data_on' = 1.

Reg0x09-Reg0x0a

Temp_out: Temperature output with an LSB equals to (1/256) °C

Reg0x30

Sleep_time[3:0]: 0000:0ms, 0001:62.5ms, 0010:125ms ... 1111: 1s, only active during sleep mode conversion.

Measurement_control: 000b, indicate a single shot temperature signal conversion. 001b, indicate a single shot sensor signal conversion. 010b: indicate a combined conversion (once temperature conversion immediately followed by once sensor signal conversion). 011b: indicate a sleep mode conversion (periodically perform once combined conversion with an interval time of 'sleep_time'), 100b: OTP programming mode, enter this mode to when programming OTP banks.

Sco: 1, Start of conversion, automatically come back to 0 after conversion ends (except sleep mode conversion).

4.2 OTP REGISTERS

Table4.2 OTP registers

Addr	Description	R/W	Bit7	Bit6	Bit5	Bit4	Bit3	Bit2	Bit1	Bit0	Default
0xa4	Part_ID	RW									OTP
0xa5	Sys_config	RW								DIAG_on	OTP
0xa6	P_config	RW						OSR_P[2:0]			OTP
0xa7	T_config	RW						OSR_T[2:0]			OTP

Reg0xA4

PartID: OTP programmed 8 bits Part ID, also can be read from address 0x01.

Reg0xA5

Diag_on: 1, Enable diagnosis function.

Reg0xA6

OSR_P: set the over sampling ratio of the sensor signal conversion channel. 000:1024X, 001:2048X, 010:4096X, 011:8192X, 100:256X, 101:512X, 110:16384X, 111:32768X.

Reg0xA7

OSR_T: set the over sampling ratio of the temperature conversion channel. 000:1024X, 001:2048X, 010:4096X, 011:8192X, 100:256X, 101:512X, 110:16384X, 111:32768X.

5. High-Speed I²C Digital Output Interface

The I²C interface is fully compatible to the official I²C protocol specification.

5.1 I²C Specification

Table5: I²C Slave Timing Values

Parameter	Symbol	Conditions	I²C			Unit
			Min	Typ	Max	
Clock frequency	f_{BsclB}				400	kHz
SCL low pulse	t_{BLOWB}		1.3			µs
SCL high pulse	t_{BHIGHB}		0.6			µs
SDA setup time	$t_{BSUDATB}$		0.1			µs
SDA hold time	$t_{BHDDATB}$		0.0			µs
Setup Time for a repeated start condition	$t_{BSUSTAB}$		0.6			µs
Hold time for a start condition	$t_{BHDSTAB}$		0.6			µs
Setup Time for a stop condition	$t_{BSUSTOB}$		0.6			µs
Time before a new transmission can start	t_{BBUFB}		1.3			µs

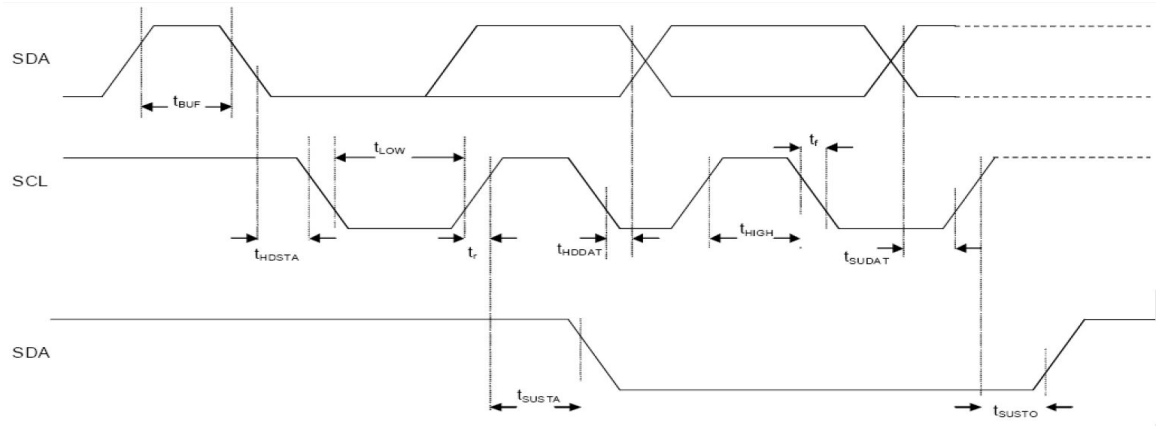

Figure 2: I²C Timing Diagram

The I²C interface protocol has special bus signal conditions. Start (S), stop (P) and binary data conditions are shown below. At start condition, SCL is high and SDA has a falling edge. Then the slave address is sent. After the 7 address bits, the direction control bit R/W selects the read or write operation. When a slave device recognizes that it is being addressed, it should acknowledge by pulling SDA low in the ninth SCL (ACK) cycle.

At stop condition, SCL is also high, but SDA has a rising edge. Data must be held stable at SDA when SCL is high. Data can change value at SDA only when SCL is low.

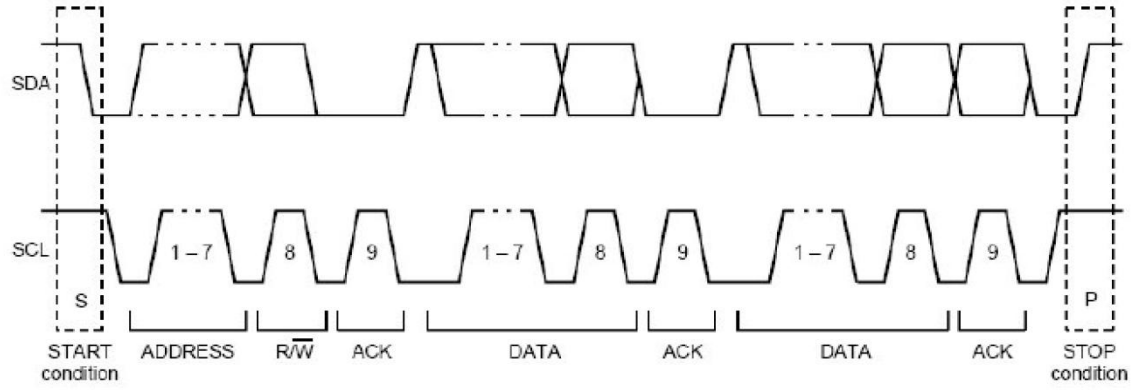

Figure 3: I²C Protocol

5.2 I²C Device Address

The I²C device address is shown below. The LSB of the device address is corresponding to address 0XDA (write) and 0XDB (read).

A7	A6	A5	A4	A3	A2	A1	W/R
1	1	0	1	1	0	SDO/ADDR	0/1

5.3 I²C Protocol

5.3.1 P_Config

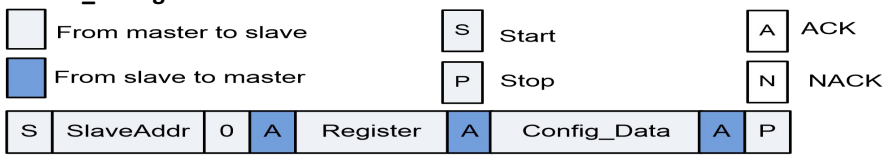

Register=0XA6
Config_Data:

Address	Description	R/W	Bit7	Bit6	Bit5	Bit4	Bit3	Bit2	Bit1	Bit0	default
0xA6	P_CONFIG	RW		No change				OSR_P<2:0>			OTP

OSR_P: set the over sampling ratio of the sensor signal conversion channel. 000:1024X, 001:2048X, 010:4096X, 011:8192X, 100:256X, 101:512X, 110: 16384X, 111:32768X.

5.3.2 T_Config

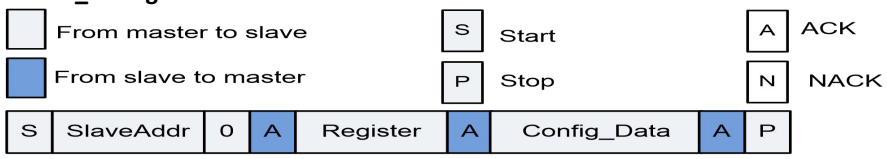

Register=0XA7
Config_Data:

Address	Description	R/W	Bit7	Bit6	Bit5	Bit4	Bit3	Bit2	Bit1	Bit0	default
0xA7	T_CONFIG	RW		No change				OSR_T<2:0>			OTP

OSR_T: set the over sampling ratio of the sensor signal conversion channel. 000:1024X, 001:2048X, 010:4096X, 011:8192X, 100:256X, 101:512X, 110: 16384X, 111:32768X.

5.3.3 Send Command

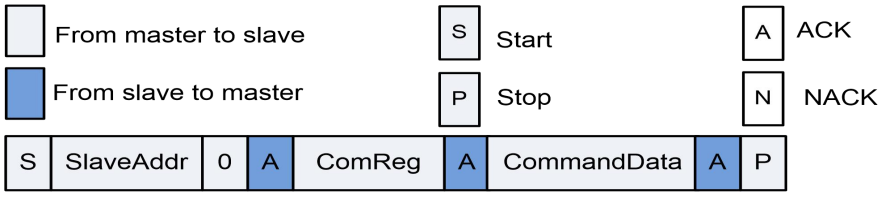

ComReg=0x30
CommandData:

Address	Description	R/W	Bit7	Bit6	Bit5	Bit4	Bit3	Bit2	Bit1	Bit0	default
0x30	CMD	RW	Sleep_time<3:0>				Sco	Measurement_ctrl<2:0>			OTP

Sleep_time<3:0>:0000:0ms, 0001:62.5ms,0010:125ms... 1111: 1s, only active during sleep mode conversion.

Measurement_control<1:0>: 010b: indicate a combined conversion (once temperature conversion immediately followed by once sensor signal conversion).

Sco: 1, Start of conversion, automatically come back to 0 after conversion ends (except sleep mode conversion).

5.3.4 Read Status

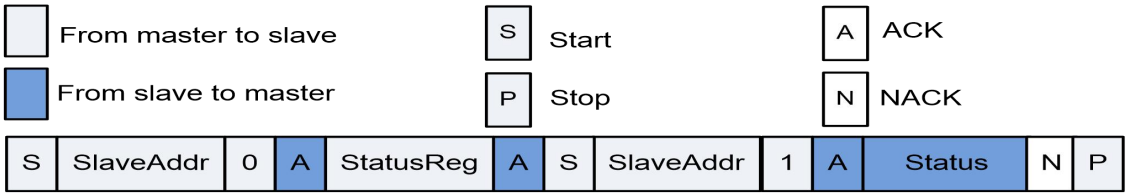

StatusReg=0x02

Status:

Address	Description	R/W	Bit7	Bit6	Bit5	Bit4	Bit3	Bit2	Bit1	Bit0
0x02	Status	R					1'b0			DRDY

DRDY： 1, indicates once conversion complete, and the output data is ready for reading.

5.3.5 Read the Pressure & Temperature Values

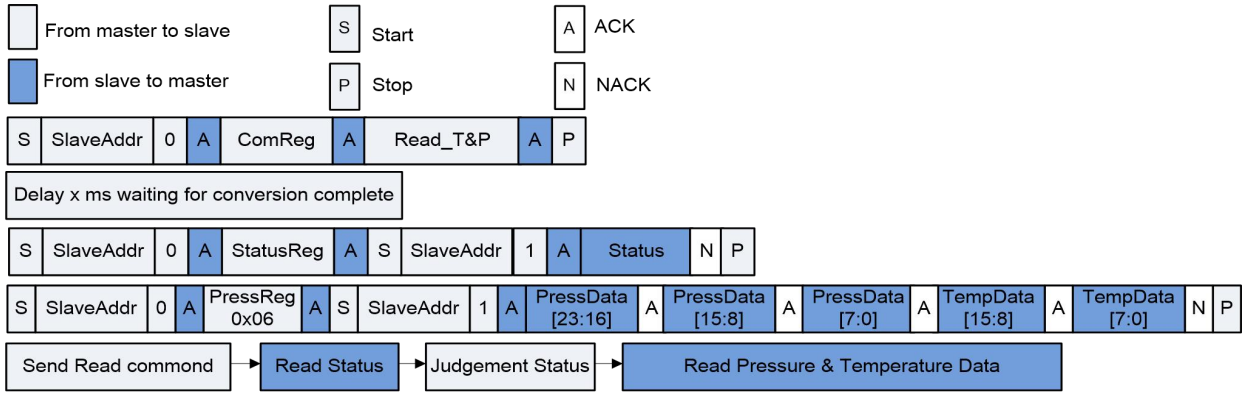

Pressure ADC bits are 24 bits 2's complement. Data format: the highest bit is the sign bit (0 is a positive number, 1 is a negative number), 23 data bits. In the 23-bit data bits, there are high N integer bits, and the low n bits are decimal bit, read the ADC number and convert it to Pa. The formula is:Pressure = Read_ADC value/2^n.

$$\text{Pressure}(Pa) = \left(\frac{\text{Read_PADC}[23:0]}{2\text{^}9}\right)$$

Temperature ADC bits are 16 bits 2's complement.Data format: the highest bit is the sign bit (0 is a positive number, 1 is a negative number),15 data bits. The high 7 bits are integer bits,the low 8 bits are decimal bits,equals to (1/256) °C.

$$\text{Temperature}(℃) = \left(\frac{\text{Read_TADC}[15:0]}{256}\right)$$

6. SPI INTERFACE

provides both SPI and I2C interface for serial communication and 'CSB' pin is used to switch between these two protocols. Pulling 'CSB' pin low selects the SPI interface, leaving 'CSB' pin float or puling it high selects the I2C interface.

6.1. INTERFACE SPECIFICATION

Table 6.1 SPI interface specifications

Symbol	Parameter	Condition	Min	Max	Unit
fBsclkB	Clock frequency	Max load on SDIO or SDO = 25pF		10	MHz
tBsclk_lB	SLCK low pulse		20		Ns
tBsclk_hB	SLCK high pulse		20		
TBsdi_setupB	SDI setup time		20		ns
TBsdi_holdB	SDI hold time		20		ns
TBsdo_odB	SDO/SDI output delay	Load = 25pF		30	ns
		Load = 250pF		40	ns
TBcsb_setupB	CSB setup time		20		ns
TBcsb_holdB	CSB hold time		40		ns

The figure below shows the definition of the SPI timing given in table 5.1

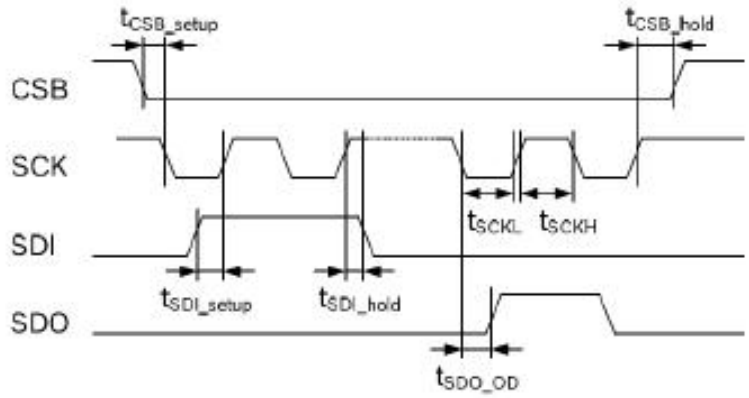

Figure 6.1 SPI timing diagram

The falling edge of CSB, in conjunction with the rising edge of SCLK, determines the start of framing. Once the beginning of the frame has been determined, timing is straightforward. The first phase of the transfer is the instruction phase, which consists of 16 bits followed by data that can be of variable lengths in multiples of 8 bits. If the device is configured with CSB tied low, framing begins with the first rising edge of SCLK. The instruction phase is the first 16 bits transmitted. As shown in Figure5.2, the instruction phase is divided into a number of bit fields.

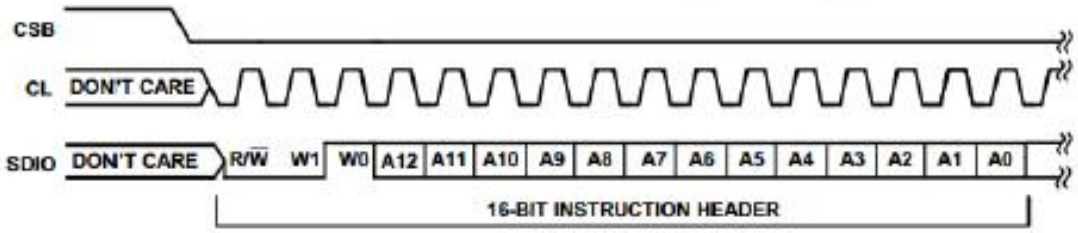

Figure6.2, Instruction Phase Bit Field.

The first bit in the stream is the read/write indicator bit (R/W). When this bit is high, a read is being requested, otherwise indicates it is a write operation. W1 and W0 represent the number of data bytes to transfer for either read or write (Table 5.2). If the number of bytes to transfer is three or less (00, 01, or 10), CSB can stall high on byte boundaries. Stalling on a nonbyte boundary terminates the communications cycle. If these bits are 11, data can be transferred until CSB transitions high.

CSB is not allowed to stall during the streaming process. The remaining 13 bits represent the starting address of the data sent. If more than one word is being sent, sequential addressing is used, starting with the one specified, and it either increments (LSB first) or decrements (MSB first) based on the mode setting.

Table6.2. W1 and W0 settings

W1:W0	Action	CSB stalling
00	1 byte of data can be transferred.	Optional
01	2 bytes of data can be transferred.	Optional
10	3 bytes of data can be transferred.	Optional
11	4 or more bytes of data can be transferred. CSB must be held low for entire sequence; otherwise, the cycle is terminated.	No

Table6.2. W1 and W0 settings

Data follows the instruction phase. The amount of data sent is determined by the word length (Bit W0 and Bit W1). This can be one or more bytes of data. All data is composed of 8-bit words. Data can be sent in either MSB-first mode or LSB-first mode (by setting 'LSB first' bit). On power up, MSB-first mode is the default. This can be changed by programming the configuration register. In MSB-first mode, the serial exchange starts with the highest-order bit and ends with the LSB. In LSB-first mode, the order is reversed. (Figure 5.3)

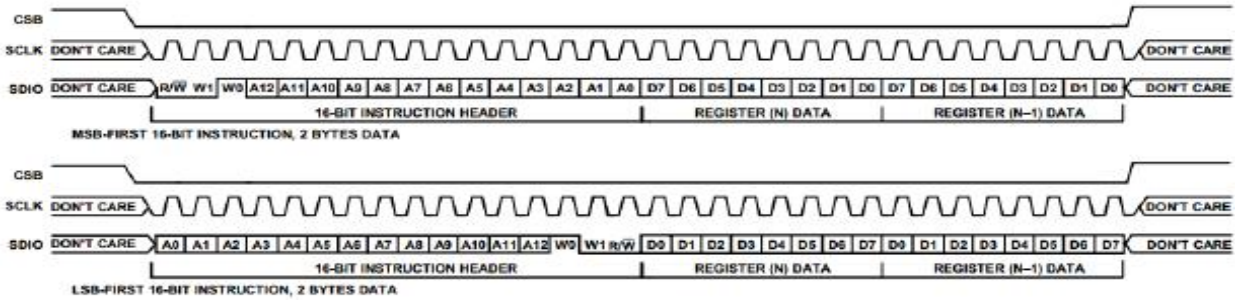

Figure6.3: MSB First and LSB First Instruction and Data Phases

Register bit 'SDO_active' is responsible for activating SDO on devices. If this bit is cleared, then SDO is inactive and read data is routed to the SDIO pin. If this bit is set, read data is placed on the SDO pin. The default for this bit is low, making SDO inactive.

6.2. SPI Protocol

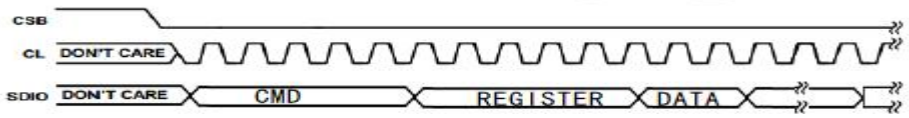

6.2.1 SPI Write one byte

CMD:0X00

6.2.2 SPI Read one byte

CMD:0X80

6.2.3 SPI Read Sensor (Pressure and Temperature)

Send Read cmd (0x00)(0x30)(0x0A)	A	WaitADC	Read 0x06	Read 0x07	Read 0x08	Read 0x09	Read 0x0A

7. Application Circuit

7.1 I²C Interface

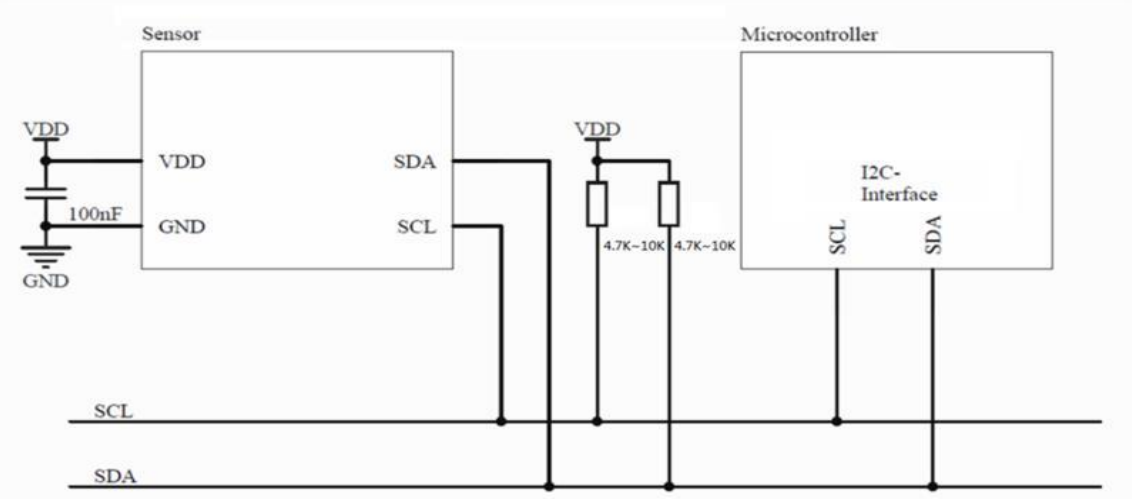

7.2 SPI Interface

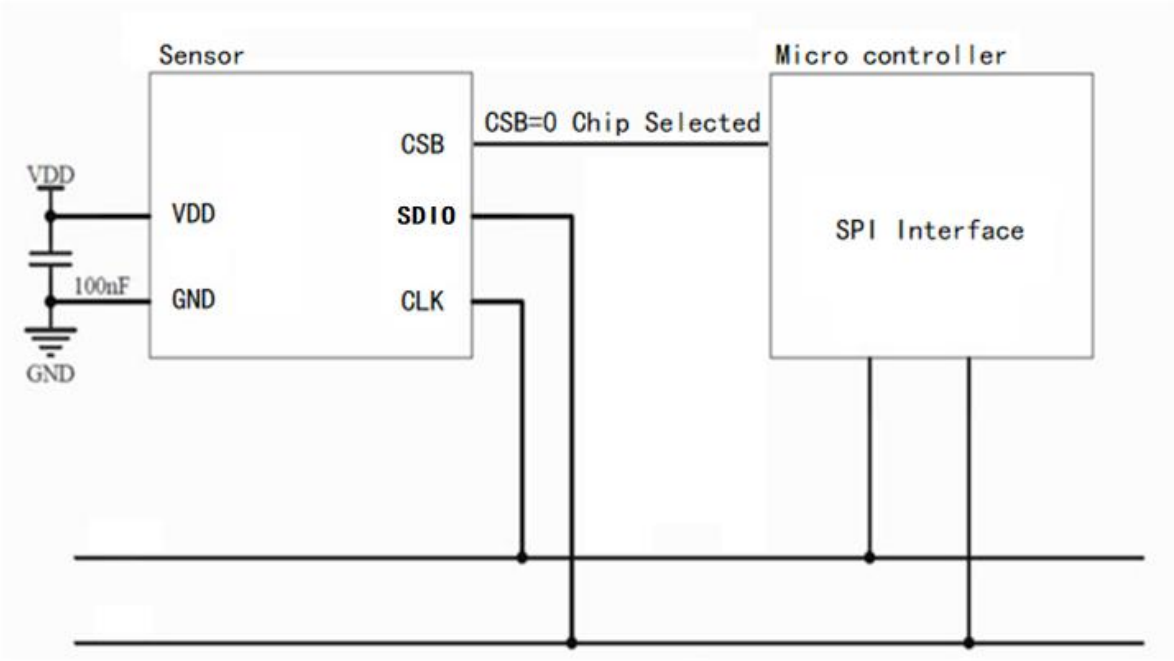

8. Package Outline and Pin Configuration (unit: mm)

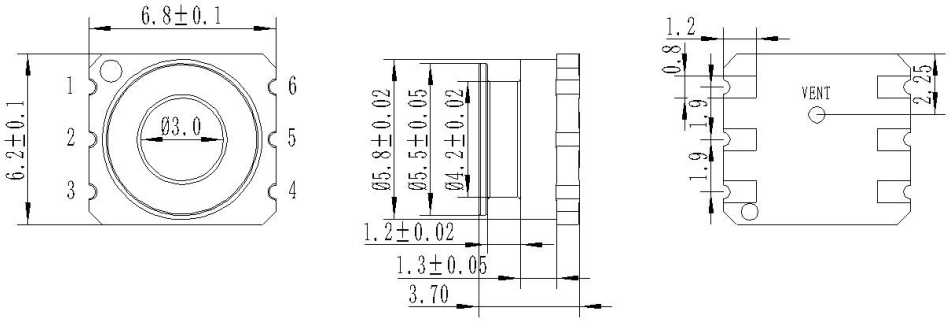

Figure 5: Package Outlines

Pin	Name	Type	Function
1	GND	G	Power Ground
2	VDD	P	Positive supply voltage
3	CSB	I	Chip select（Float I²C / Low SPI）
4	ADR/SD0	I/O	Serial data output in 4-wire SPI mode Address select in I²C mode
5	SDA/SDI/SDIO	I/O	Serial data input/output in I2C mode (SDA) Serial data input in 4-wire SPI mode (SDI) Serial data input/output in 3-wire SPI mode (SDIO)
6	SCL	I	Serial data clock

Figure6: Pin Configuration and Description

8.1 Recommend to the “O” ring select

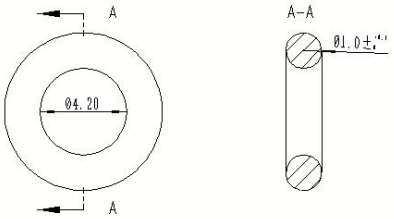

Note: Silicon rubber ,hardness 50 ±5 shore A

9. Recommended Pad Layout (unit: mm)

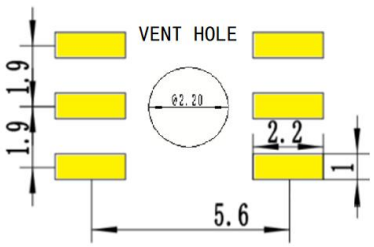

Figure7: Pad layout

10. Shipping Package

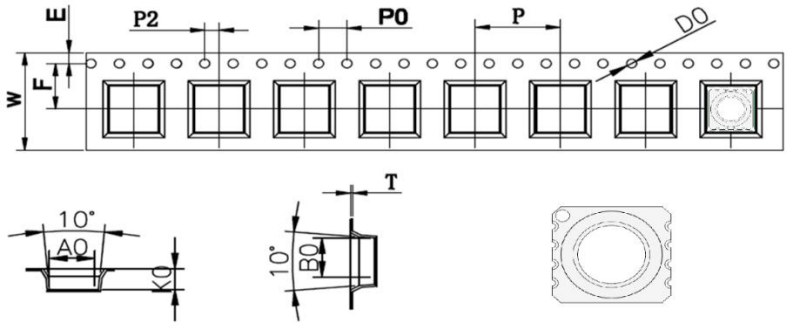

ITEM	W	A0	B0	K0	K1	P	F	E	D0	D1	P0	P2	T
DIM	16.0	6.80	7.20	3.50	0.00	12.0	7.50	1.75	1.5	0	4.0	2.0	0.35
TOLE	±0.3	±0.1	±0.1	±0.1	±0.1	±0.1	±0.1	±0.1	+0.1 -0.0	min	±0.1	±0.1	±0.05

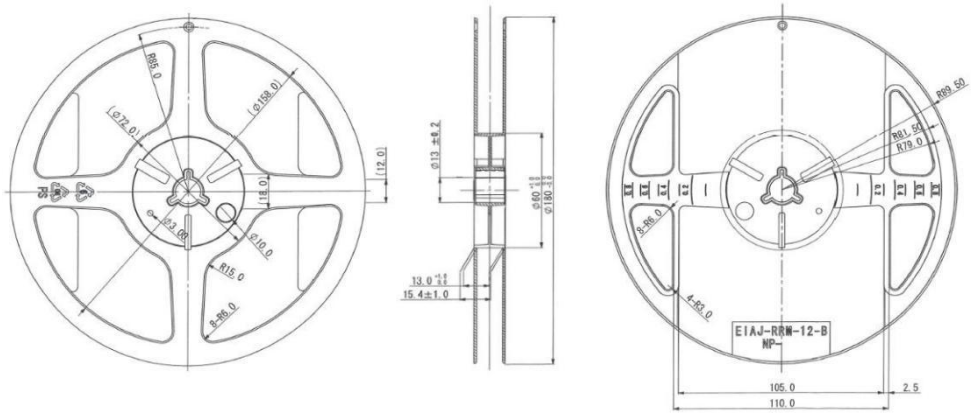

(Tape&Reel)

11. Soldering Recommendation（IPC/JEDEC J-STD-020D）

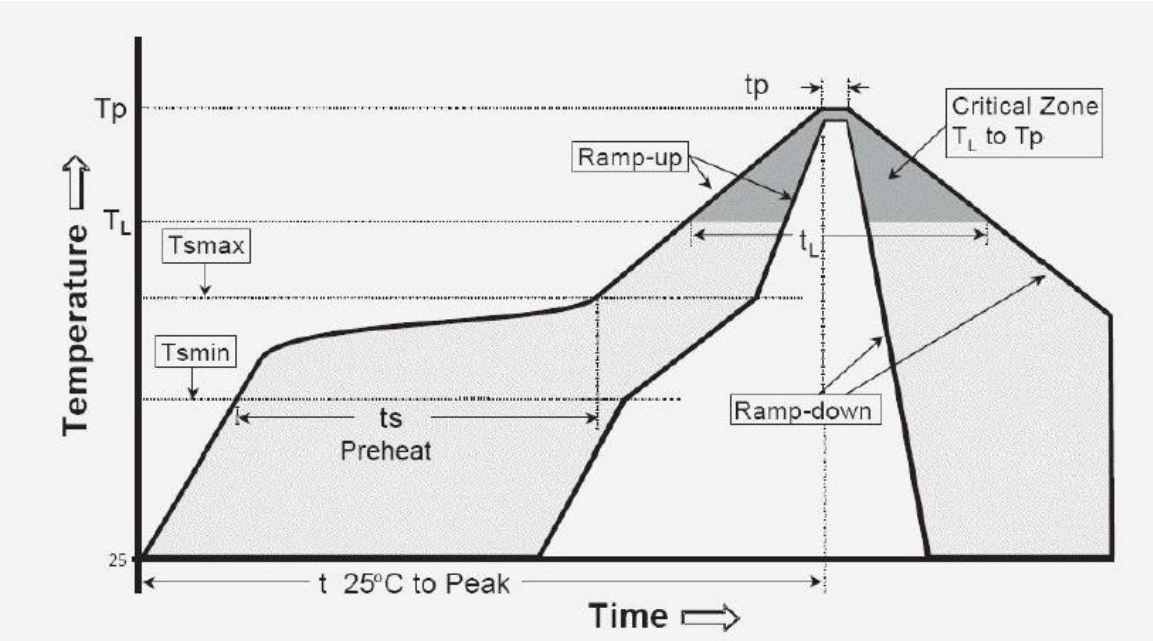

IPC/JEDEC J-STD-020D	Pb-Free Assembly
Average Ramp-up rate（TL-Tp）	3℃/s（Max.）
Preheat –Temperature Min. (Tsmin) –Temperature Max. (Tsmax) –Time (Min. to Max.) (ts)	 140℃ 170℃ 60-180 seconds
Tsmax to TL –Tp	3℃/s（Max.）
Time maintained above: –Temperature (TL) –Time (tL)	 200℃ above 60-150 seconds
Peak temperature (Tp)	200~220℃
Time of Real peak temperature within 5℃ (tp)	40 seconds
Average Ramp-down rate（Tp-TL）	6℃/s（Max.）
Time 25℃ to peak temperature	8min.（Max.）

Note：

1) It is recommended that only one time reflow soldering, no more than two times.
2) After reflow soldering or other high temperature processes, wait for at least 48 hours (or as required by the data sheet) before data reading and processing.
3) Spot cleaning by hand if necessary, DO NOT wash or submerge sensor in cleaning liquid.
4) It is recommended to use the medium temperature solder paste.

12.LEGAL DISCLAIMER

1) For the export of products which are controlled items subject to foreign and domestic export laws and regulations, you must obtain approval and/or follow the formalities of such laws and regulations.

2) Products must not be used for military and/or antisocial purposes such as terrorism, and shall not be supplied to any party intending to use the products for such purposes.

3) Unless provided otherwise, the products have been designed and manufactured for application to equipment and devices which are sold to end-users in the market.

4) Before using products which were not specifically designed for use in automotive applications, please contact an AIOT sales representative.

5) This specification is subject to change without notice.

AIoTSensing Inc.

TEL：+86 0551-65336537

Email：sales@aiotsensing.com

Website：http://www.aiotsensing.com

Address: 2nd Floor, Building 4, Mingzhu Industrial Park, No. 106, Chuangxin Avenue, High-tech Zone, Hefei City, 230088 China