REV.	DESCRIPTION	DATE

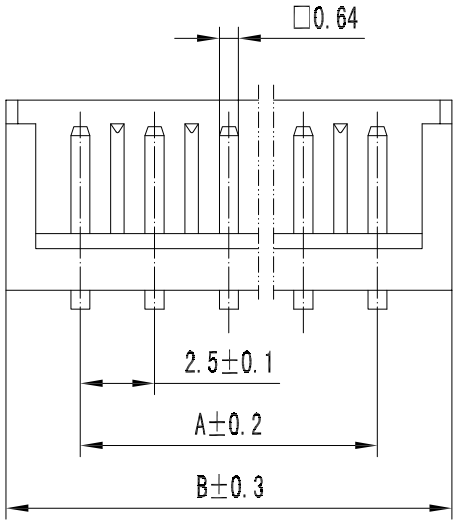

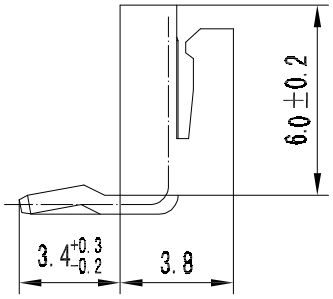

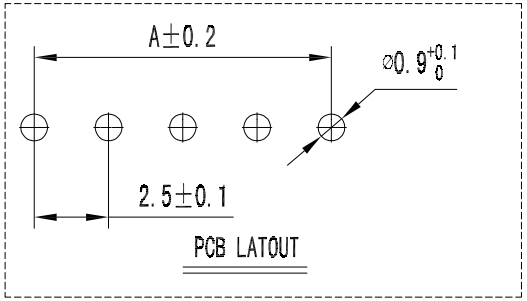

NOTES:

1、 Rated voltage: 250V AC.DC.
2、 Rated current: 3A AC.DC.
3、 Contact resistance: ≤20 mΩ.
4、 Insulation resistance: ≥1000 MΩ.
5、 Withstand voltage : ≥800V AC/minute.
6、 Ambient temperature: -25℃～85℃.
7、 Materials: NYLON66 UL94V-0(2).
8、 Pin Material: Brass.Tin-Plated.
9、 Green Material RoHS Compliant.

P/N	DIM A	DIM B
02	2.5	7.5
03	5.0	10.0
04	7.5	12.5
05	10.0	15.0
06	12.5	17.5
07	15.0	20.0
08	17.5	22.5
09	20.0	25.0
10	22.5	27.5
11	25.0	30.0
12	27.5	32.5
13	30.0	35.0
14	32.5	37.5
15	35.0	40.0

借用登记
旧底图总号
底图总号
签 字
日 期

.X: ±0.25 X° : ±3.0°
.XX: ±0.15 .X° : ±2.0°
.XXX: ±0.01 .XX° : ±1.0°

DRAWN BY
CHK. BY
APRV. BY

UNIT	SIZE	SCALE
MM	A4	1:1

DRAWING NO.

浙江深海电子有限公司

SHEET	PROD. NAME	EH-PW
1 OF 1	PART NO.	
	TITLE	