REV.	DESCRIPTION	DATE

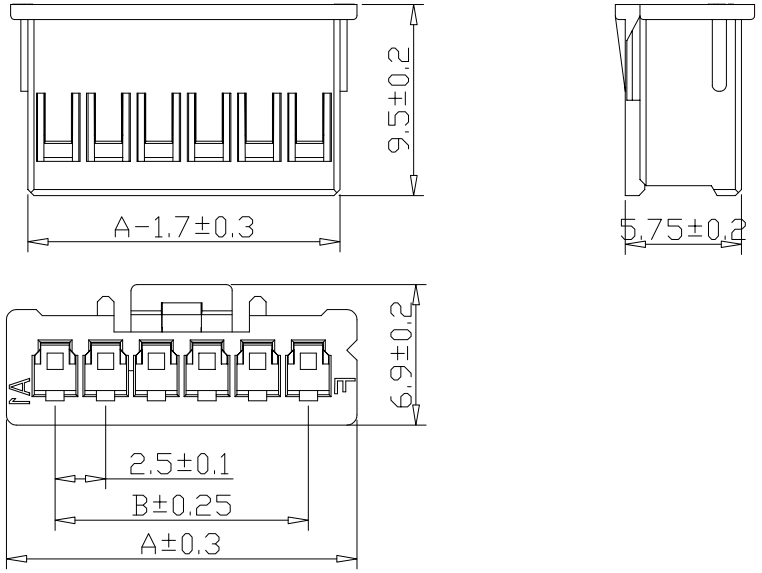

孔位	A-mm	B-mm
XA-2Y	7.35	2.5
XA-3Y	9.85	5.0
XA-4Y	12.35	7.5
XA-5Y	14.85	10.0
XA-6Y	17.35	12.5
XA-7Y	19.85	15.0
XA-8Y	22.35	17.5
XA-9Y	24.85	20.0
XA-10Y	27.35	22.5
XA-11Y	29.85	25.0
XA-12Y	32.35	27.5
XA-13Y	34.85	30.0
XA-14Y	37.35	32.5
XA-15Y	39.85	35.0
XA-16Y	42.35	37.5

使用温度范围 (Ambient temperature Range):-25°~+85°

适用线规 (Applicable Wires):AWG 28#~22#

适用基板厚度 (Applicable PCboard thickness):1.6mm

额定电压 (Voltage rating):250V AC,DC

额定电流 (Current rating):3A

接触电阻 Contact Resistance):≤0.01Ω

绝缘电阻 (Insulation Resistance):≥1000MΩ

耐压 (Withstand Voltange):800V/min

材料 (Material)

1.基座：PA66 94V-0

序号	图号	名称	材料	数量	附注
2					
1		Housing 基座	PA66 94V-0	1	White 白色

X.°±3°	X.X°±5°
>0-3	>3-18 >18-50 >50-120
±0.12	±0.15 ±0.3 ±0.5

UNIT	SIZE	SCALE
MM	A4	1:1

DRAWN BY

CHK. BY

APRV. BY

DRAWING NO.

浙江深海电子有限公司

SHEET 1 OF 1 | PROD. NAME XA-NY | PART NO. | TITLE

借用登记

旧底图总号

底图总号

签 字

日 期