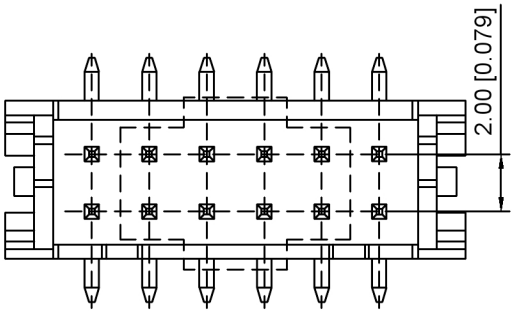

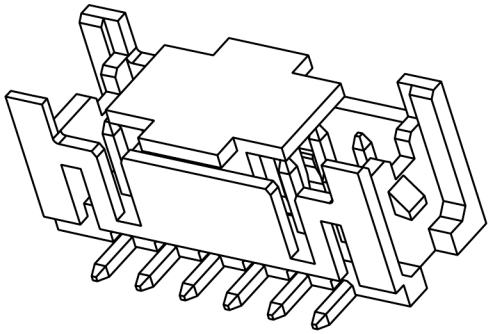

Specifications:
规格：
Voltage rating:250V AC/DC
额定电压：250V AC/DC
Current rating:3A AC/DC
额定电流：3A AC/DC
Withstanding voltage:800V AC/minute
耐受电压：800V AC/分钟
Temperature range:-25℃-+85℃
温度范围：-25℃-+85℃
Insulation resistance：1000MΩ min
绝缘电阻：1000MΩ Min
Contact resistance:20mΩ Max
接触电阻：20mΩ Max

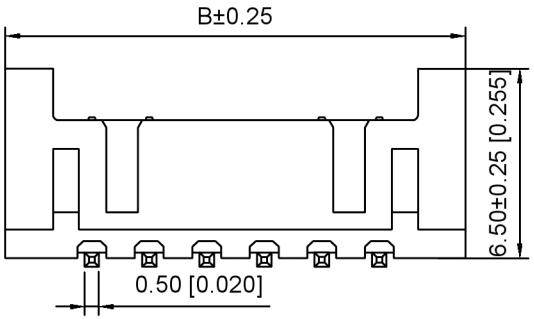

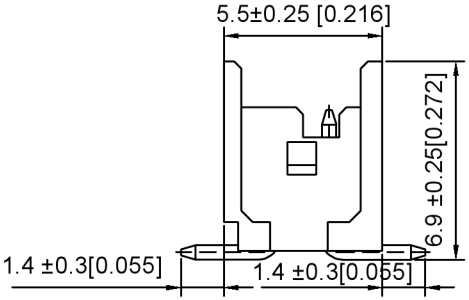

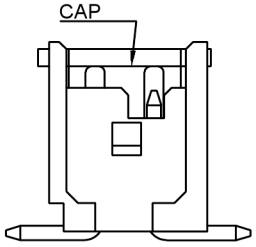

X2026 W V S - 2xXX A - 6T SN
① ② ③ ④ ⑤ ⑥ ⑦ ⑧

1.Series No
2.Category:W-WAFER
3.Welding Board Angle:V-Straight 180°
4.Welding Way:S-SMT
5.Row No-Pin No:2xXX-2x02P~2x20P
6.Special N0:A-With Lock on both side
7.Material:6T-PA6T 94V-0
8.Plating Category:SN-Bright Tin Plating

Poles	Dimensions(mm)	
	A	B
2x02	2.00	8.00
2x03	4.00	10.00
2x04	6.00	12.00
2x05	8.00	14.00
2x06	10.00	16.00
2x07	12.00	18.00
2x08	14.00	20.00
2x09	16.00	22.00
2x10	18.00	24.00
2x11	20.00	26.00
2x12	22.00	28.00
2x20	38.00	44.00

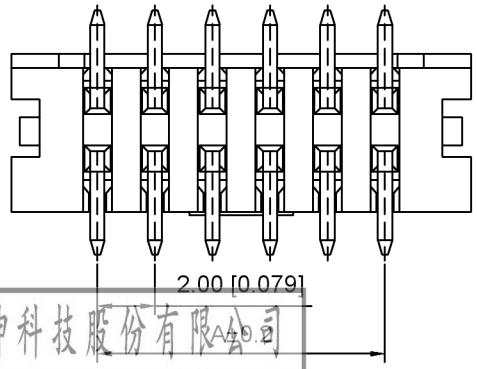

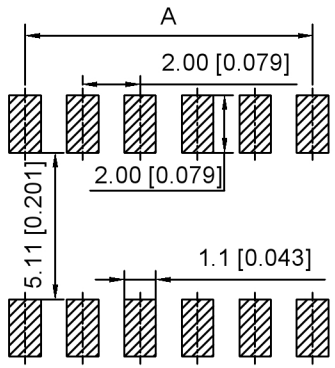

PCB LAYOUT

X2026WVS-2xXXA-6TSN	PA6T	Tin	X2026H
PART N0	Material	Plating	Suitable XKB Housing

广东星坤科技股份有限公司
生效 日期
文件工程章

MARK	DESCRIPTION	DATE	REVISED	APPROVED
ΔX				
ΔX				
ΔX				

ANGLAR	±5°
L≤ 4	±0.2
4<L≤ 16	±0.3
16<L≤ 63	±0.4
L> 63	±0.5

REVISIONS
UNSPECIFIED TOLERANCES

DSND		SCALE: N/A
DWN		VIEW:
CHKD		UNIT: mm/in
APPD		SIZE: A4

MODEL TYPE: 2.00mm Crimp Style Connectors
PART NO.: X2026WVS-2xXXA-6TSN
DWG NO.: X-X2026WVS-2xXXA-6TSN

XKB INDUSTRIAL PRECISION CO.,LIMITED

WEIGHT	SHEET	REVISION
	1/1	A0