ROHS

REV.	ECN NO.	DESCRIPTION	DRAW	DATE

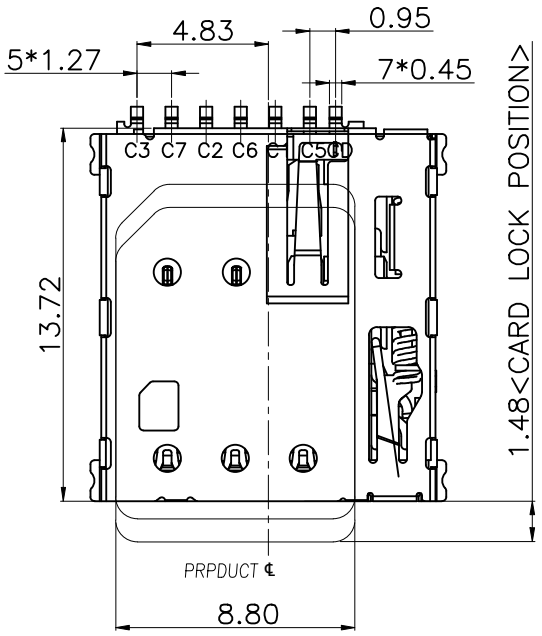

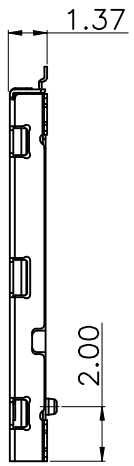

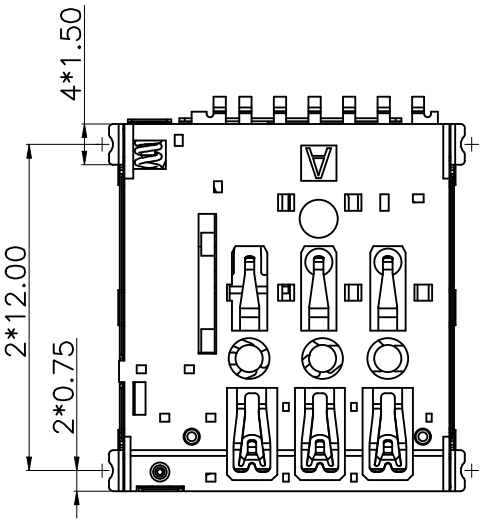

NOTES:
1.MATERIAL:
HOUSING: High Temperature Thermoplastic
Terminal:Copper Alloy
Shell: Stainless Steel
2.PLATING:
Terminal:30u" Ni UNDERPLATED OVERALL
G/F PLATED ON CONTACT AREA AND SOLDER AREA
Sheel:30u" Ni UNDERPLATED OVERALL
G/F PLATED ON CONTACT AREA AND SOLDER AREA
3.TECHNICAL SPECIALITY:
RATED VOLTAGE: 30V AC MAX.
CURRENT RATING: 0.5A MAX.
INSULATION RESISTANCE:1000MΩMIN
CONTACT REISTANCE:100mΩMAX
WITHSTANDING VOLTAGE: 500V AC FOR 1 MINUTES
OPERATING TEMPERATURE: −40℃~+85℃Humidity 80% R.H MAX

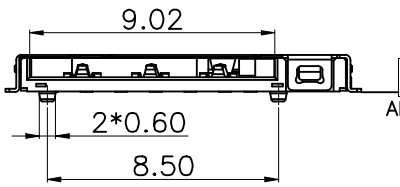

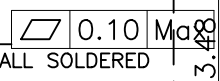

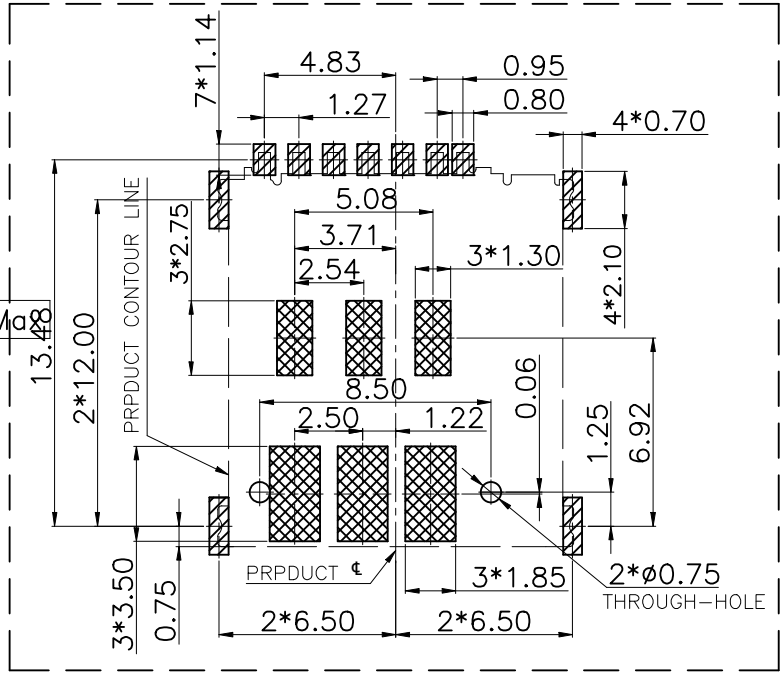

RECOMMENDED PCB LAYOUT TOP VIEW (TOLERANCE:±0.05)
RECOMMENDED MATAL MASK T=0.12mm
SMT SOLDER AREA
NO PATTERN AND VIA HOLE IN HTIS AREA

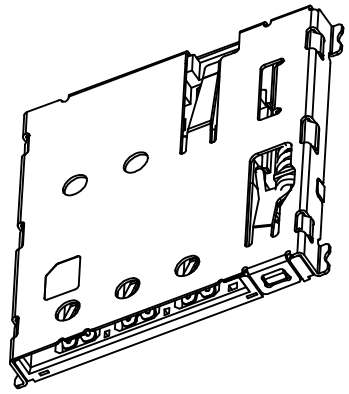

COSTOMER DRAWING			深圳市莱联电子有限公司 SHENZHEN LAILIAN ELECTRONICS CO.,LTD		
DRAWING			TITLE	SIM卡卡座T1.37（自弹式）	REV. A
CHECK			PART NO.	LAIL-SIM06-T1.37-T	UNITS mm
APPROVAL			DWG.NO.		Projection
TOLERANCES ARE					
30-150	±0.35	ANGLE			
10-30	±0.2				
5-10	±0.15	±3°			
0-5	±0.1				

ROHS

REV.	ECN NO.	DESCRIPTION	DRAW	DATE

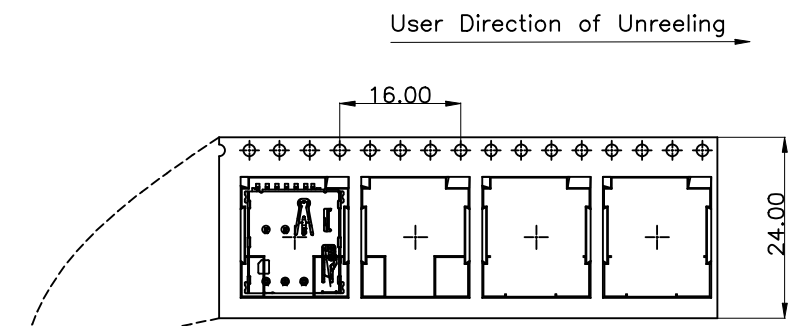

NOTES

1. NUMBER OF CONNECTORS:1500PCS/REEL
2. LEAD TAPE LENGTH

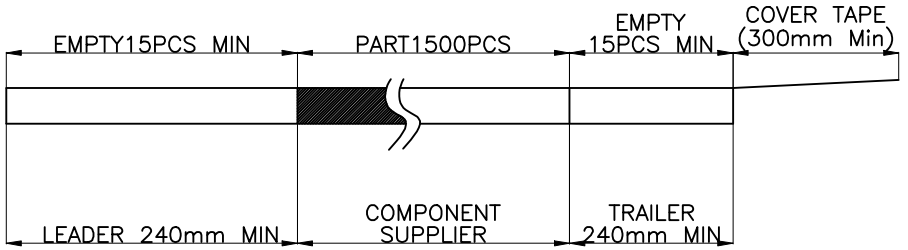

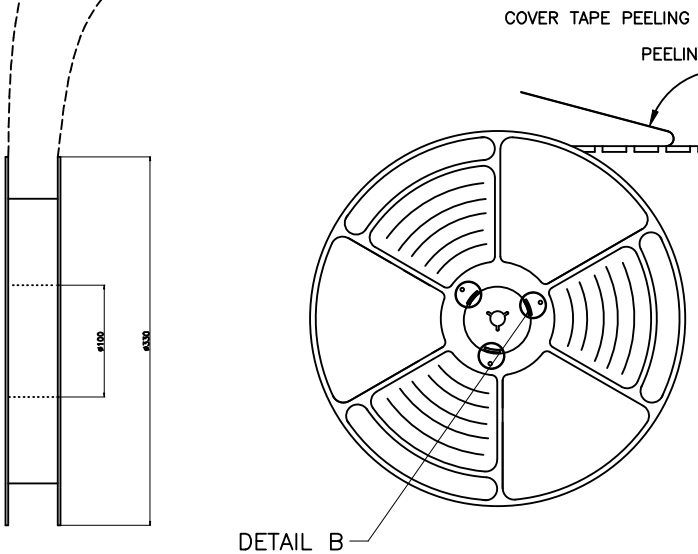

3.QUANTITY:15000PCS/CARTON

4. WEIGHT :

3.1 NET WEIGHT : Kg

3.2 GROSS WEIGHT : Kg

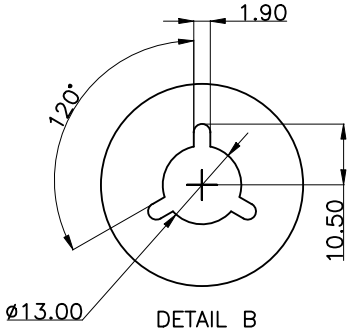

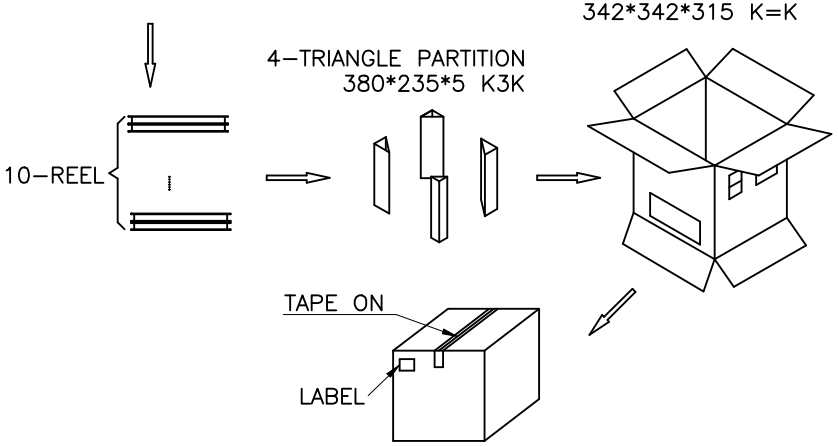

COSTOMER DRAWING			深圳市莱联电子有限公司 SHENZHEN LAILIAN ELECTRONICS CO.,LTD		
DRAWING			TITLE	SIM卡卡座T1.37（自弹式）	REV. A
CHECK			PART NO.	LAIL-SIM06-T1.37-T	UNITS mm
APPROVAL			DWG.NO.		Projection
TOLERANCES ARE					
30-150	±0.35	ANGLE			
10-30	±0.2				
5-10	±0.15	±3°			
0-5	±0.1				