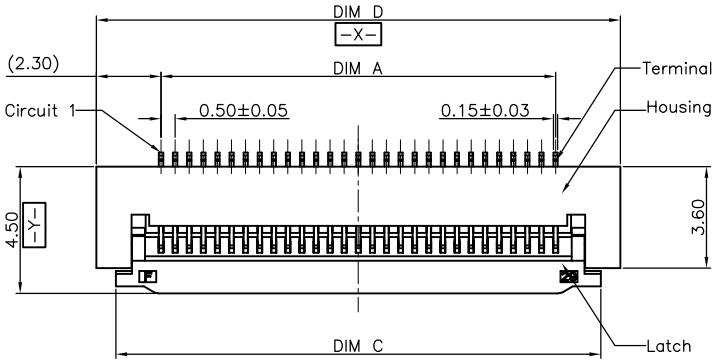


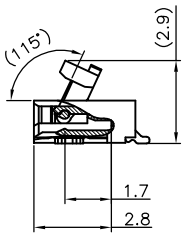


SECTION A–A
SCALE 1:1

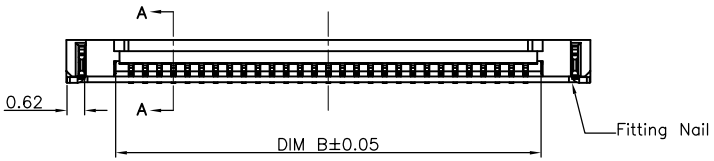


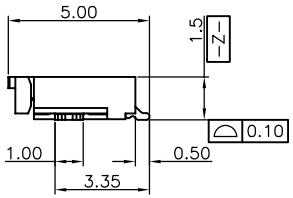


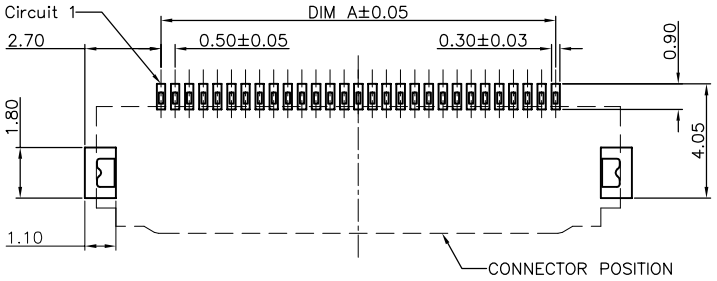


RECOMMENDED P.C.B PATTERN LAYOUT

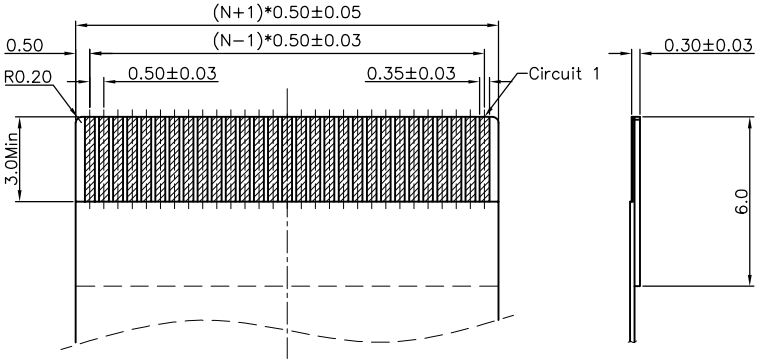


RECOMMENDED FPC/FFC DIMENSION

Note:
1. Material:
 1.1 Housing: thermoplastic high temp.UL94V–0; Color: natural.
 1.2 Latch: thermoplastic high temp.UL94V–0; Color: black.
 1.3 Terminal: copper alloy.
 1.4 Fitting Nail: copper alloy.
2. Finsh:
 2.1 Terminal:
  Underplating: Au/matt Tin overall.
 2.2 Fitting Nail:
  Underplating: matt Tin overall.
3. Product must comply HF RoHS specification.
4. Product No:

5001–FPC 05 15 –** R 1-00 -B
- B: Standby
- 1-00: ALTERNATE
- R: PACKING:R:卷;T:管
- 15: PIN
- 05: HIGH:1.5
- FPC: PITCH:0.5
- 翻盖下接
- 5001: JME CONNECTOR SERIES

| CKTS | DIM A | DIM B | DIM C | DIM D |
|---|---|---|---|---|
| 4 | 1.50 | 2.60 | 4.70 | 6.10 |
| 5 | 2.00 | 3.10 | 5.20 | 6.60 |
| 6 | 2.50 | 3.60 | 5.70 | 7.10 |
| 7 | 3.00 | 4.10 | 6.20 | 7.60 |
| 8 | 3.50 | 4.60 | 6.70 | 8.10 |
| 9 | 4.00 | 5.10 | 7.20 | 8.60 |
| 10 | 4.50 | 5.60 | 7.70 | 9.10 |
| 11 | 5.00 | 6.10 | 8.20 | 9.60 |
| 12 | 5.50 | 6.60 | 8.70 | 10.10 |
| 13 | 6.00 | 7.10 | 9.20 | 10.60 |
| 14 | 6.50 | 7.60 | 9.70 | 11.10 |
| 15 | 7.00 | 8.10 | 10.20 | 11.60 |
| 16 | 7.50 | 8.60 | 10.70 | 12.10 |
| 17 | 8.00 | 9.10 | 11.20 | 12.60 |
| 18 | 8.50 | 9.60 | 11.70 | 13.10 |
| 19 | 9.00 | 10.10 | 12.20 | 13.60 |
| 20 | 9.50 | 10.60 | 12.70 | 14.10 |
| 21 | 10.00 | 11.10 | 13.20 | 14.60 |
| 22 | 10.50 | 11.60 | 13.70 | 15.10 |
| 23 | 11.00 | 12.10 | 14.20 | 15.60 |
| 24 | 11.50 | 12.60 | 14.70 | 16.10 |
| 25 | 12.00 | 13.10 | 15.20 | 16.60 |
| 26 | 12.50 | 13.60 | 15.70 | 17.10 |
| 27 | 13.00 | 14.10 | 16.20 | 17.60 |
| 28 | 13.50 | 14.60 | 16.70 | 18.10 |
| 29 | 14.00 | 15.10 | 17.20 | 18.60 |
| 30 | 14.50 | 15.60 | 17.70 | 19.10 |
| 31 | 15.00 | 16.10 | 18.20 | 19.60 |
| 32 | 15.50 | 16.60 | 18.70 | 20.10 |
| 33 | 16.00 | 17.10 | 19.20 | 20.60 |
| 34 | 16.50 | 17.60 | 19.70 | 21.10 |
| 35 | 17.00 | 18.10 | 20.20 | 21.60 |
| 36 | 17.50 | 18.60 | 20.70 | 22.10 |
| 37 | 18.00 | 19.10 | 21.20 | 22.60 |
| 38 | 18.50 | 19.60 | 21.70 | 23.10 |
| 39 | 19.00 | 20.10 | 22.20 | 23.60 |
| 40 | 19.50 | 20.60 | 22.70 | 24.10 |
| 41 | 20.00 | 21.10 | 23.20 | 24.60 |
| 42 | 20.50 | 21.60 | 23.70 | 25.10 |
| 43 | 21.00 | 22.10 | 24.20 | 25.60 |
| 44 | 21.50 | 22.60 | 24.70 | 26.10 |
| 45 | 22.00 | 23.10 | 25.20 | 26.60 |
| 46 | 22.50 | 23.60 | 25.70 | 27.10 |
| 47 | 23.00 | 24.10 | 26.20 | 27.60 |
| 48 | 23.50 | 24.60 | 26.70 | 28.10 |
| 49 | 24.00 | 25.10 | 27.20 | 28.60 |
| 50 | 24.50 | 25.60 | 27.70 | 29.10 |
| 51 | 25.00 | 26.10 | 28.20 | 29.60 |
| 52 | 25.50 | 26.60 | 28.70 | 30.10 |
| 53 | 26.00 | 27.10 | 29.20 | 30.60 |
| 54 | 26.50 | 27.60 | 29.70 | 31.10 |
| 55 | 27.00 | 28.10 | 30.20 | 31.60 |
| 56 | 27.50 | 28.60 | 30.70 | 32.10 |
| 57 | 28.00 | 29.10 | 31.20 | 32.60 |
| 58 | 28.50 | 29.60 | 31.70 | 33.10 |
| 59 | 29.00 | 30.10 | 32.20 | 33.60 |
| 60 | 29.50 | 30.60 | 32.70 | 34.10 |

| Rev 版本 | Change Description 变更内容 | Date 日期 | Revisor 制/修订人 |
|---|---|---|---|
| A | 初版发行 | 2012/11/22 | Allan |

CUSTOMER DRAWING

| | |
|---|---|
| Tolerance Unspecified (未注公差) 0.0 ±0.15 0°. ±5° 0.00 ±0.10 0°.0 ±3° 0.000 ±0.05 0°.00 ±1° | Size(图幅): A4 |
| | Unit(单位): MM |
| | Scale(比例): 1 : 1 |
| Project View (投影视角) | Page(页数): 1 OF 1 |
| | Rev(版本): A |

深圳市文章济美科技有限公司
Shenzhen WenZhangJiMei technology co., LTD

| | | |
|---|---|---|
| Product Name(产品名称): 0.5Pitch H=1.5 FPC Easy-on R/A S/C Type1 SMT CONN | | |
| Product No(产品料号): 5001-FPC0515-**R1-00-B | | |
| Designer(设计): Allan 11/22'12 | Checked(审核): | Approved(核准): |