Rev: A1

High Pass Filter

JY-HFCW-133+

Features
- Good rejection
- Tiny size, 0603 (0.063" X 0.032" X 0.024")
- Good power handling, 2.5W

Applications
- Test and Measurement Equipment
- EW, Radar and ECM Defense Systems
- Back Haul Radio Systems



50Ω 14000~20500MHz

电性能参数规格 性能参数表(1) at 25 °C

参数		频率 (MHz)	Min.	Typ.	Max.	Unit
阻带	阻带抑制	DC-8500 8500-10200 10700-12700	28 24 15	- - -	- - -	dB
通带	插入损耗	14000-16500 16500-19500 19500-20500	- - -	2.5 1.1 1.2	- 1.9 -	dB
	电压驻波比	14000-16500 16500-19500 19500-20500	- - -	2.0 - 2.0	- 1.8 -	:1

(1)该产品不能直接使用于直流电路中，如需使用于直流电路中，则需在输入和输出端匹配合适的电容。

Maximum Ratings	
Operating Temperature	-55°C to 100°C
Storage Temperature	-55°C to 100°C
RF Power Input	2.5W at 25°C

Permanent damage may occur if any of these limits are exceeded.

electrical schematic

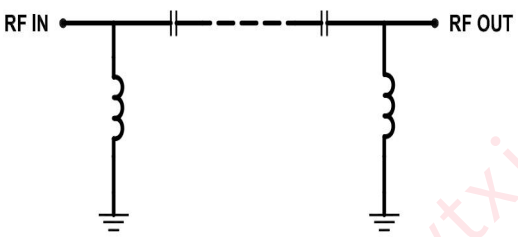

Suggested PCB Layout

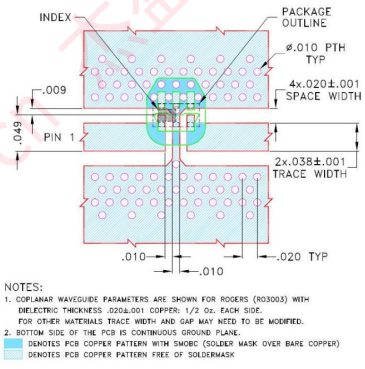

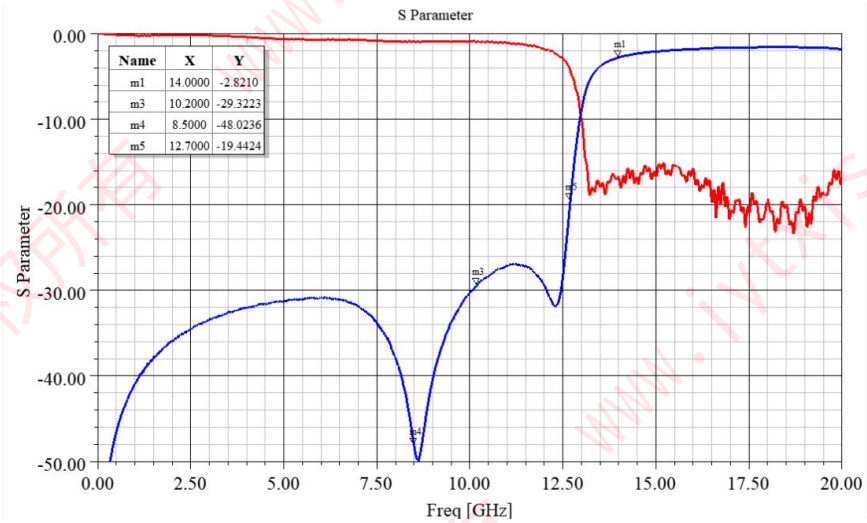

Pin Connections	
INPUT	1
OUTPUT	3
GROUND	2,4,5,6

Outline Drawing

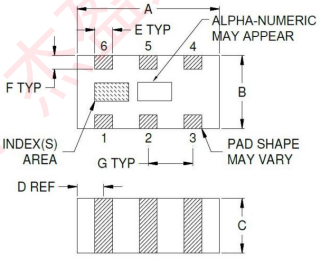

Suggested Layout
Tolerance to be within ±0.15

Outline Dimensions: Unit (mm)

A	1.60	B	0.80	C	0.60
D	0.30	E	0.20	F	0.15
G	0.50				

JY-HFCW-133+

Tel : +86 0755-27881106
Fax : +86 0755-27597069
Add : 806 Building B7, Tianrui Industrial Park, Fuyong Street, Baoan District, Shenzhen

www.iytxjs.cn 杰盈通讯版权所有