MSPM0L111x Mixed-Signal Microcontrollers

1 Features

- **Core**
  - Arm® 32-bit Cortex®-M0+ CPU with memory protection unit, frequency up to 32MHz
- PSA-L1 Certification targeted
- **Operating characteristics**
  - Extended temperature: –40°C to 125°C
  - Wide supply voltage range: 1.62V to 3.6V
- **Memories**
  - Up to 128KB of flash memory with error correction code (ECC)
    - Dual-bank with address swap for OTA updates
  - 16KB of SRAM
- **High-performance analog peripherals**
  - One 12-bit 1.68Msps analog-to-digital converter (ADC) with up to 13 external channels
    - 14-bit effective resolution at 105ksps with hardware averaging
  - Configurable 1.4V or 2.5V internal voltage reference (VREF)
  - Integrated temperature sensor
- **Optimized low-power modes**
  - RUN: 106µA/MHz (CoreMark)
  - SLEEP: 50µA/MHz
  - STOP: 239µA at 4MHz
  - STANDBY: 1.5µA at 32kHz with RTC and full SRAM and state retention
  - SHUTDOWN: 75nA with IO wake-up capability
- **Intelligent digital peripherals**
  - 3-channel DMA controller
  - 3-channel event fabric signaling system
  - A total of 14 PWM channels supported by:
    - One 16-bit advanced timer with deadband support and complimentary outputs up to 8 PWM channels
    - Two 16-bit general-purpose timers support low-power operation in STANDBY mode
    - One 16-bit general purpose timer supporting QEI
  - One windowed watchdog timer (WWDT)
  - One independent watchdog timer (IWDT)
  - RTC with alarm and calendar mode
- **Enhanced communication interfaces**
  - Two UART interfaces supporting low-power operation in STANDBY mode
    - One supporting LIN, IrDA, DALI, Smart Card, Manchester
  - One I^2C interface supporting up to FM+ (1Mbit/s), SMBus/PMBus, and wakeup from STOP mode
  - One SPI interface supporting up to 16Mbit/s
- **Clock system**
  - Internal 4 to 32MHz oscillator (SYSOSC) with up to ±1.2% accuracy
  - Internal 32kHz low-frequency oscillator (LFOSC) with ±3% accuracy
  - External 32-kHz crystal oscillator (LFXT)
- **Data integrity and encryption**
  - AES-128/256 accelerator with support for GCM/GMAC, CCM/CBC-MAC, CBC, CTR
  - Secure key storage for up to two AES keys
  - Flexible firewalls for protecting code and data
  - True random number generator (TRNG)
  - Cyclic redundancy checker (CRC-16, CRC-32)
- **Flexible I/O features**
  - Up to 44 GPIOs
    - Two 5V-tolerant open-drain IOs
    - Seven high-drive IOs with 20mA drive strength
    - One high-speed IO
- **Development support**
  - 2-pin serial wire debug (SWD)
- **Package options**
  - 48-pin LQFP (PT) (0.5mm pitch)
  - 48-pin VQFN (RGZ) (0.5mm pitch)
  - 32-pin VQFN (RHB) (0.5mm pitch)
  - 24-pin VQFN (RGE) (0.5mm pitch)
- **Family members** (also see *Device Comparison*)
  - MSPM0L1116: 64KB of flash, 16KB of RAM
  - MSPM0L1117: 128KB of flash, 16KB of RAM
- **Development kits and software** (also see *Tools and Software*)
  - LP-MSPM0L1117 LaunchPad™ development kit
  - MSP Software Development Kit (SDK)

An IMPORTANT NOTICE at the end of this data sheet addresses availability, warranty, changes, use in safety-critical applications, intellectual property matters and other important disclaimers. PRODUCTION DATA.

2 Applications

- Battery charging and management
- Power supplies and power delivery
- Personal electronics
- Building security and fire safety
- Connected peripherals and printers
- Energy Infrastructure - Smart Metering
- Smart metering
- Communication modules
- Medical and healthcare
- Lighting

Copyright © 2025 Texas Instruments Incorporated

3 Description

MSPM0L111x microcontrollers (MCUs) are part of the MSP highly-integrated, ultra-low-power 32-bit MCU family based on the enhanced Arm® Cortex®-M0+ core platform operating at up to 32MHz frequency. These cost-optimized MCUs offer high-performance analog peripheral integration and excellent low-power current consumption. The MCUs also support extended temperature ranges from -40°C to 125°C and operate with supply voltages ranging from 1.62V to 3.6V.

The device has up to 128KB of embedded flash memory with built-in error correction code (ECC) and up to 16KB SRAM. The flash memory is organized into two main banks to support field firmware updates, with address swap support provided between the two main banks.

Flexible cybersecurity enablers can be used to support secure boot, secure in-field firmware updates, IP protection (execute-only memory), key storage, and more. Hardware acceleration is provided for a variety of AES symmetric cipher modes, as well as a TRNG entropy source. The cybersecurity architecture is pending Arm® PSA Level 1 certification.

These MCUs incorporate a high-speed on-chip oscillator with an accuracy up to ±1.2%, eliminating the need for an external crystal. Additional features include a 3-channel DMA, 16-bit/32-bit CRC accelerator, and a variety of high-performance analog peripherals such as one 12-bit 1.68Msps ADC with configurable internal voltage reference and an on-chip temperature sensor. These devices also offer intelligent digital peripherals such as one 16-bit advanced control timer and two 16-bit general purpose timers, one general purpose timer with Quadrature Enabled Input, windowed and independent watchdog timer, and a variety of communication peripherals including one I^2C, one SPI, and two UARTs (one with support for LIN protocol).

The TI MSPM0 family of low-power MCUs consists of devices with varying degrees of analog and digital integration allowing for customers to find the MCU that meets their project's needs. The architecture combined with extensive low-power modes are optimized to achieve extended battery life in portable measurement applications.

MSPM0L111x MCUs are supported by an extensive hardware and software ecosystem with reference designs and code examples to get the design started quickly. Development kits include a LaunchPad™ development kit available for purchase and design files for a target-socket board. TI also provides a free MSP Software Development Kit (SDK), which is available as a component of Code Composer Studio™ IDE desktop and cloud version within the TI Resource Explorer. MSPM0 MCUs are also supported by extensive online collateral, training with MSP Academy, and online support through the TI E2E™ support forums.

For complete module descriptions, see the *MSPM0 L-Series 32MHz Microcontrollers Technical Reference Manual*.

CAUTION

System-level ESD protection must be applied in compliance with the device-level ESD specification to prevent electrical overstress or disturbing of data or code memory. See MSP430™ System-Level ESD Considerations for more information; the principles in this application note are applicable to MSPM0 MCUs.

Device Information

PART NUMBER	PACKAGE(1)	PACKAGE SIZE(2)
MSPM0L1116SRGER	RGE (VQFN, 24)	4mm x 4mm
MSPM0L1117SRGER		
MSPM0L1116SRHBR	RHB (VQFN, 32)	5mm x 5mm
MSPM0L1117SRHBR		
MSPM0L1116SRGZR	RGZ (VQFN, 48)	7mm x 7mm
MSPM0L1117SRGZR		

Copyright © 2025 Texas Instruments Incorporated

Device Information (continued)

PART NUMBER	PACKAGE(1)	PACKAGE SIZE(2)
MSPM0L1116SPTR	PT (LQFP, 48)	9mm x 9mm
MSPM0L1117SPTR		

(1) For more information, see Mechanical, Packaging, and Orderable Information.
(2) The package size (length x width) is a nominal value and includes pins, where applicable.

Copyright © 2025 Texas Instruments Incorporated

4 Functional Block Diagram

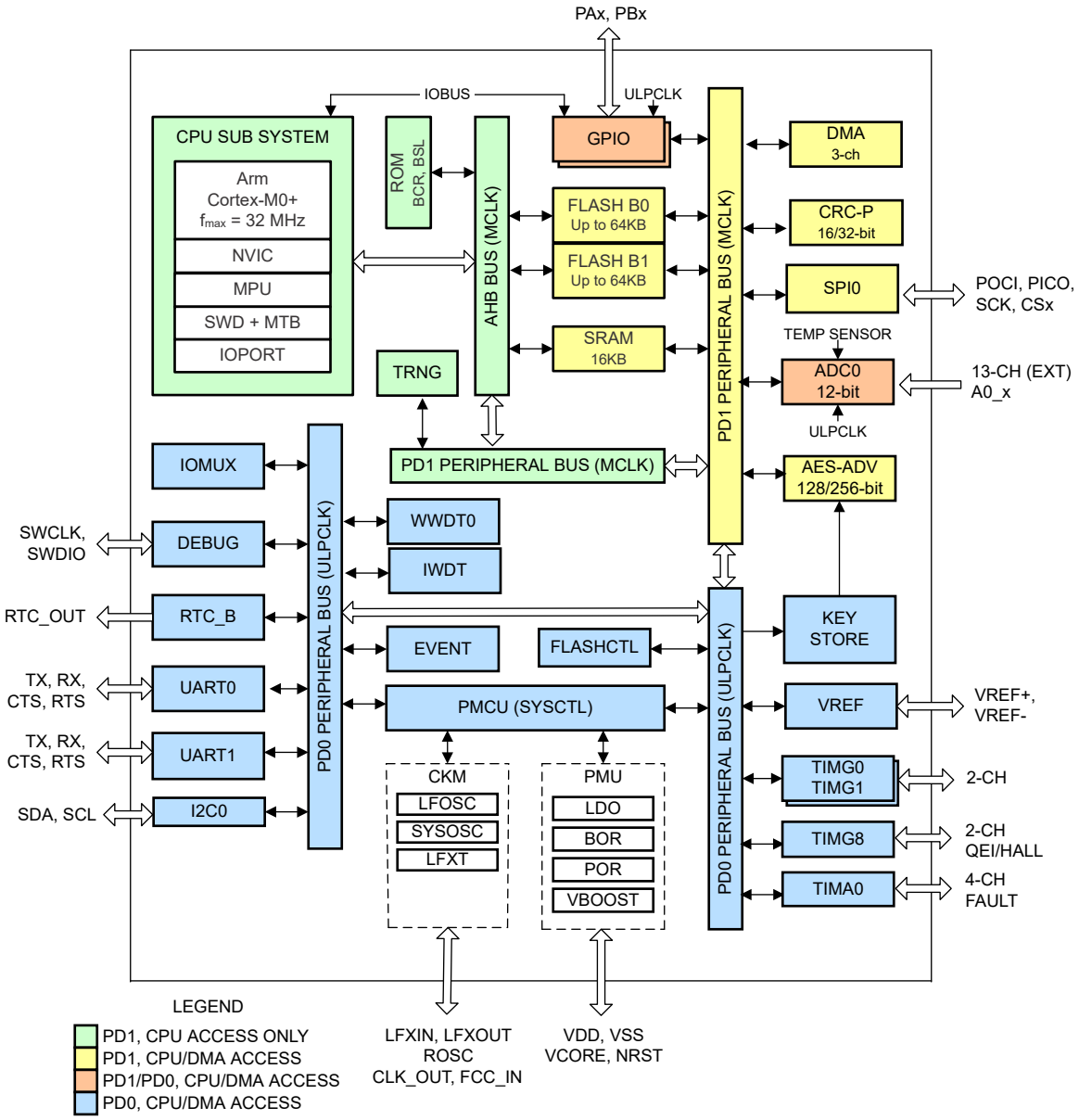

Figure 4-1. MSPM0L111x Functional Block Diagram

Copyright © 2025 Texas Instruments Incorporated

Table of Contents

1 Features....1
2 Applications....2
3 Description....3
4 Functional Block Diagram....5
5 Device Comparison....7
5.1 Device Comparison Table....8
6 Pin Configuration and Functions....9
6.1 Pin Diagrams....9
6.2 Pin Attributes....12
6.3 Signal Descriptions....19
6.4 Connections for Unused Pins....25
7 Specifications....26
7.1 Absolute Maximum Ratings....26
7.2 ESD Ratings....26
7.3 Recommended Operating Conditions....26
7.4 Thermal Information....27
7.5 Supply Current Characteristics....27
7.6 Power Supply Sequencing....29
7.7 Flash Memory Characteristics....30
7.8 Timing Characteristics....31
7.9 Clock Specifications....32
7.10 Digital IO....33
7.11 Analog Mux VBOOST....36
7.12 ADC....36
7.13 Temperature Sensor....38
7.14 VREF....39
7.15 I2C....39
7.16 SPI....40
7.17 UART....42
7.18 TIMx....42
7.19 TRNG Electrical Characteristics....42
7.20 TRNG Switching Characteristics....42
7.21 Emulation and Debug....43
8 Detailed Description....44
8.1 Functional Block Diagram....44
8.2 CPU....44
8.3 Operating Modes....45
8.4 Power Management Unit (PMU)....47
8.5 Clock Module (CKM)....47
8.6 DMA....47
8.7 Events....48
8.8 Memory....49
8.9 Flash Memory....51
8.10 SRAM....51
8.11 GPIO....51
8.12 IOMUX....52
8.13 ADC....52
8.14 Temperature Sensor....53
8.15 VREF....54
8.16 Security....54
8.17 TRNG....55
8.18 AESADV....55
8.19 Keystore....55
8.20 CRC-P....55
8.21 UART....56
8.22 I2C....56
8.23 SPI....57
8.24 Low-Frequency Sub System (LFSS)....57
8.25 RTC_B....57
8.26 IWDT_B....58
8.27 WWDT....58
8.28 Timers (TIMx)....59
8.29 Device Analog Connections....60
8.30 Input/Output Diagrams....60
8.31 Serial Wire Debug Interface....61
8.32 Bootstrap Loader (BSL)....62
8.33 Device Factory Constants....62
8.34 Identification....63
9 Applications, Implementation, and Layout....64
9.1 Typical Application....64
10 Device and Documentation Support....65
10.1 Device Nomenclature....65
10.2 Tools and Software....66
10.3 Documentation Support....66
10.4 Support Resources....67
10.5 Trademarks....67
10.6 Electrostatic Discharge Caution....67
10.7 Glossary....67
11 Revision History....67
12 Mechanical, Packaging, and Orderable Information....69

Copyright © 2025 Texas Instruments Incorporated

5 Device Comparison

The following table summarizes the features of each device that is described in this data sheet.

Table 5-1. Device Comparison

DEVICE NAME (1) (2)	FLASH / SRAM (KB)	QUAL(3)	UART/I2C/SPI	ADC CH	GPIO	PACKAGE (PACKAGE SIZE) (4)
MSPM0L1117SPTR	128 / 16	S	2 / 1 / 1	13	44	48 LQFP (0.5mm pitch) (9mm × 9mm)
MSPM0L1116SPTR	64 / 16	S	2 / 1 / 1	13	44	
MSPM0L1117SRGZR	128 / 16	S	2 / 1 / 1	13	44	48 VQFN (0.5mm pitch) (7mm × 7mm)
MSPM0L1116SRGZR	64 / 16	S	2 / 1 / 1	13	44	
MSPM0L1117SRHBR	128 / 16	S	2 / 1 / 1	11	28	32 VQFN (0.5mm pitch) (5mm × 5mm)
MSPM0L1116SRHBR	64 / 16	S	2 / 1 / 1	11	28	
MSPM0L1117SRGER	128 / 16	S	2 / 1 / 1	7	20	24 VQFN (0.5mm pitch) (4mm × 4mm)
MSPM0L1116SRGER	64 / 16	S	2 / 1 / 1	7	20	

(1) For the most current part, package, and ordering information for all available devices, see the *Package Option Addendum* in Section 12, or see the TI website.
(2) For more information about the device name, see Section 10.1.
(3) Device qualifications:
- S = –40°C to 125°C

(4) The package size (length × width) is a nominal value and includes pins, where applicable. For the package dimensions with tolerances, see the *Mechanical Data* in Section 12.

Copyright © 2025 Texas Instruments Incorporated

5.1 Device Comparison Table

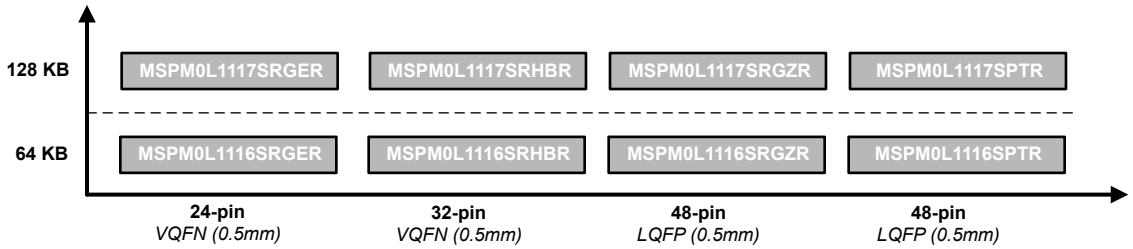

Copyright © 2025 Texas Instruments Incorporated

6 Pin Configuration and Functions

The System Configuration tool provides a graphical interface to enable, configurable, and generate initialization code for pin multiplexing and simplifying pin settings. The pin diagrams shown in the data sheet show the primary peripheral functions, some of the integrated device features, and available clock signals to simplify the device pinout.

For full descriptions of the pin functions, see the *Pin Attributes* and *Signal Descriptions* sections.

6.1 Pin Diagrams

For full pin configuration and functions for each package option, refer to Section 6.2 and Section 6.3

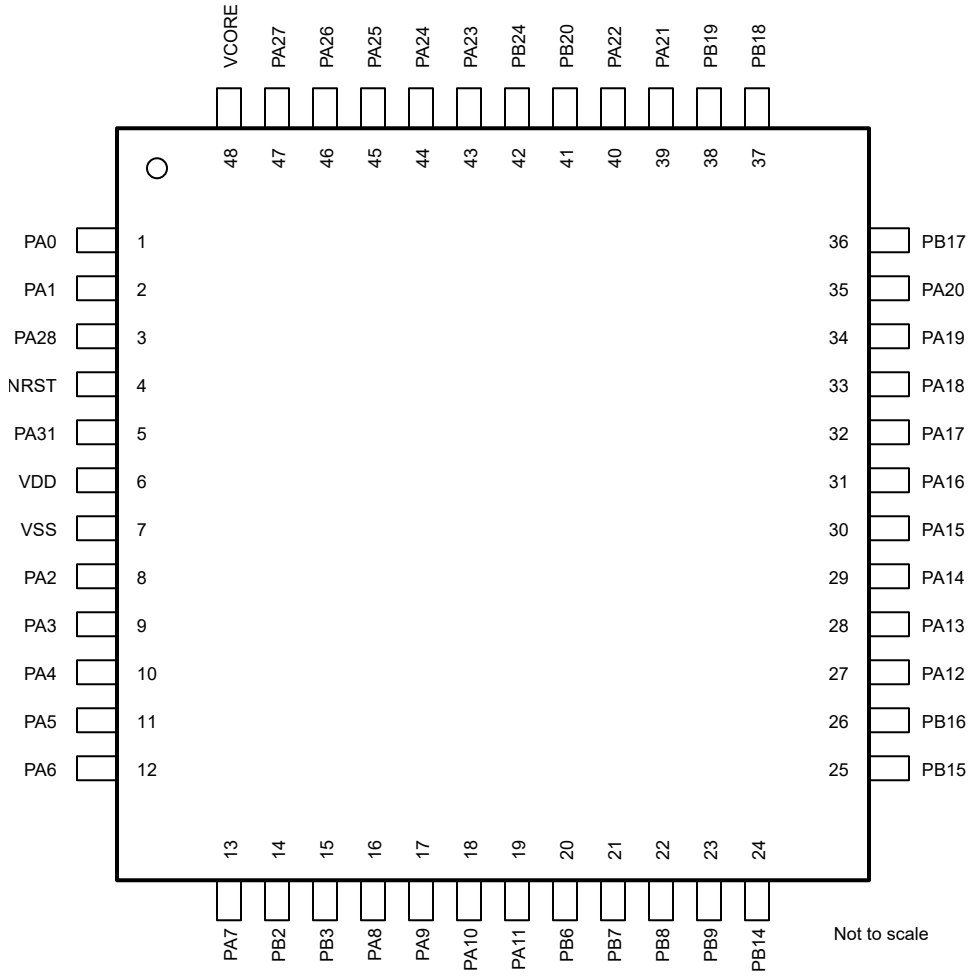

Figure 6-1. 48-pin PT (0.5mm) (LQFP) Package Diagram

Copyright © 2025 Texas Instruments Incorporated

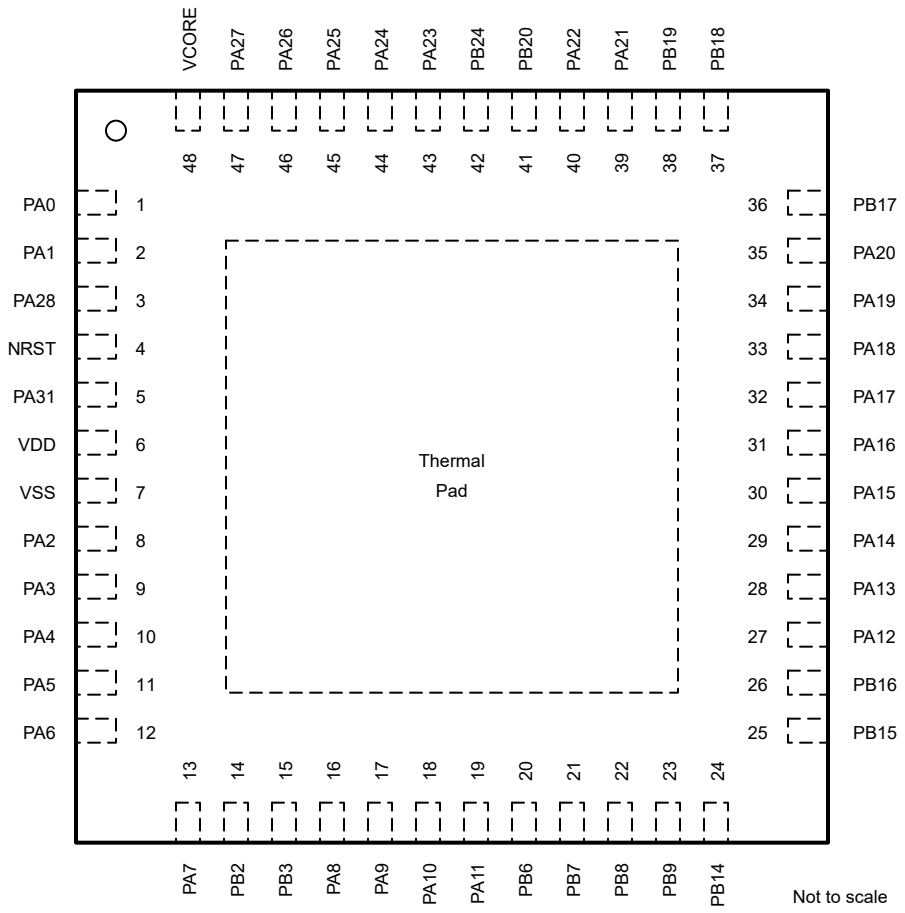

Figure 6-2. 48-pin RGZ (0.5mm) (VQFN) Package Diagram

Copyright © 2025 Texas Instruments Incorporated

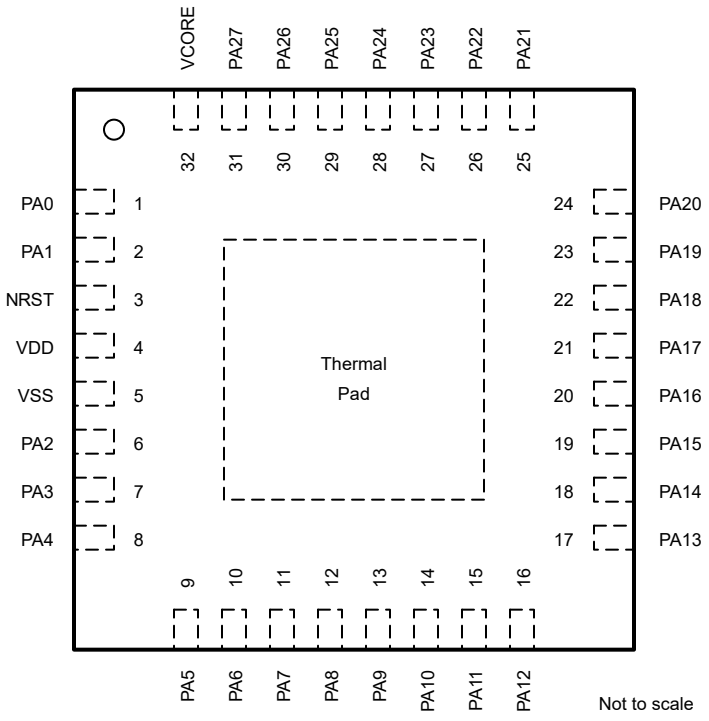

Figure 6-3. 32-pin RHB (0.5mm) (VQFN) Package Diagram

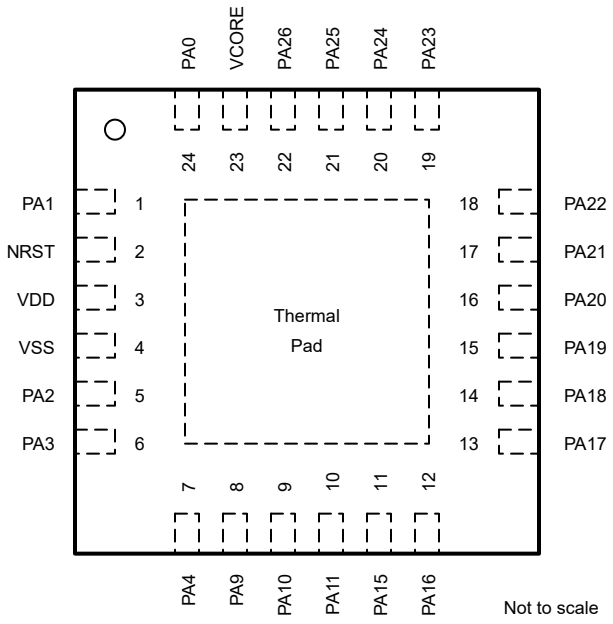

Figure 6-4. 24-pin RGE (0.5mm) (VQFN) Package Diagram

6.2 Pin Attributes

The following table describes the functions available on every pin for each device package.

Note

Each digital I/O on a device is mapped to a specific Pin Control Management Register (PINCMx) that lets users configure the desired *Pin Function* using the PINCM.PF control bits.

The IOMUX only supports connecting one IOMUX-managed digital function to the pin at the same time. The PINCM.PF and PINCM.PC in Section 8.12 are recommended to be set to 0 when non-IOMUX managed functions (such as analog connections) are intended to be used on a pin. However, non-IOMUX managed signals (such as analog inputs and WAKE inputs) can be enabled on a pin at the same time that an IOMUX managed digital function is enabled on the pin, provided there is no contention between the functions. In this case, the designer must verify that no contention exists between the functions enabled on each pin.

Table 6-1. Digital IO Features by IO Type

IO STRUCTURE	INVERSION CONTROL	DRIVE STRENGTH CONTROL	HYSTERESIS CONTROL	PULLUP RESISTOR	PULLDOWN RESISTOR	WAKEUP LOGIC
SDIO (Standard drive)	Y			Y	Y	
SDIO (Standard drive) with wake(1)	Y			Y	Y	Y
HDIO (High drive)	Y	Y		Y	Y	Y
HSIO (High speed)	Y	Y		Y	Y	
ODIO (5V-tolerant open drain)	Y		Y		Y	Y

1. Standard with Wake allows the I/O to wake up the device from the lowest low-power mode of SHUTDOWN. All I/O can be configured to wakeup the MCU from higher low-power modes. See section *GPIO FastWake* in the *MSPM0 L-Series 32MHz Microcontrollers Technical Reference Manual* for details.

Table 6-2. Pin Attributes

RGE PIN	RHB PIN	RGZ PIN	PT PIN	PIN NAME/ IOMUX REG/ IOMUX ADDR	SIGNAL NAME	IOMUX PF	SIGNAL TYPE	BUFFER TYPE
2	3	4	4	NRST	NRST	(Non-IOMUX 1) 0	I	RESET
					WAKE	(Non-IOMUX 2) 0	I	
24	1	1	1	PA0 PINCM1 0x40428000	PA0	1	IO	ODIO (5V-tol)
					UART0_TX	2	O	
					I2C0_SDA	3	IOD	
					TIMA0_C0	4	IO	
					TIMA_FAL1	5	I	
					FCC_IN	6	I	
					TIMG8_C1	7	IO	
					TIMG0_C0	9	IO	
					BSLSDA	(Non-IOMUX 1) 0	IOD	
					WAKE	(Non-IOMUX 2) 0	I	

Copyright © 2025 Texas Instruments Incorporated

Table 6-2. Pin Attributes (continued)

RGE PIN	RHB PIN	RGZ PIN	PT PIN	PIN NAME/ IOMUX REG/ IOMUX ADDR	SIGNAL NAME	IOMUX PF	SIGNAL TYPE	BUFFER TYPE
1	2	2	2	PA1 PINCM2 0x40428004	PA1	1	IO	ODIO (5V-tol)
					UART0_RX	2	I	
					I2C0_SCL	3	IOD	
					TIMA0_C1	4	IO	
					TIMA_FAL2	5	I	
					TIMG8_IDX	6	I	
					TIMG8_C0	7	IO	
					TIMG0_C1	9	IO	
					SPI0_CS3	10	IO	
					BSLSCL	(Non-IOMUX 1) 0	IOD	
					WAKE	(Non-IOMUX 2) 0	I	
5	6	8	8	PA2 PINCM7 0x40428018	PA2	1	IO	SDIO (standard)
					TIMG8_C1	2	IO	
					SPI0_CS0	3	IO	
					TIMA0_C3N	6	O	
					TIMA0_C2N	7	O	
					TIMA_FAL0	8	I	
					TIMA_FAL1	9	I	
					TIMA0_C0	11	IO	
					ROSC	(Non-IOMUX 1) 0	A	
6	7	9	9	PA3 PINCM8 0x4042801c	PA3	1	IO	SDIO (standard)
					TIMG8_C0	2	IO	
					SPI0_CS1	3	IO	
					TIMA0_C1	5	IO	
					TIMA0_C2	8	IO	
					UART1_TX	10	O	
					SPI0_CS3	11	IO	
					LFXIN	(Non-IOMUX 1) 0	A	
7	8	10	10	PA4 PINCM9 0x40428020	PA4	1	IO	SDIO (standard)
					TIMG8_C1	2	IO	
					SPI0_POCI	3	IO	
					TIMA0_C1N	5	O	
					LFCLK_IN	6	I	
					TIMA0_C3	8	IO	
					UART1_RX	10	I	
					SPI0_CS0	11	IO	
					LFXOUT	(Non-IOMUX 1) 0	A	
	9	11	11	PA5 PINCM10 0x40428024	PA5	1	IO	SDIO (standard)
					TIMG8_C0	2	IO	
					SPI0_PICO	3	IO	
					SPI0_POCI	4	IO	
					TIMG0_C0	5	IO	
					FCC_IN	6	I	
					TIMA_FAL1	8	I	
					UART0_CTS	9	I	
					UART1_TX	11	O	

Copyright © 2025 Texas Instruments Incorporated

Table 6-2. Pin Attributes (continued)

RGE PIN	RHB PIN	RGZ PIN	PT PIN	PIN NAME/ IOMUX REG/ IOMUX ADDR	SIGNAL NAME	IOMUX PF	SIGNAL TYPE	BUFFER TYPE
	10	12	12	PA6 PINCM11 0x40428028	PA6	1	IO	SDIO (standard)
					TIMG8_C1	2	IO	
					SPI0_SCK	3	IO	
					TIMG0_C1	5	IO	
					HFCLK_IN	6	I	
					TIMA_FAL0	8	I	
					UART0_RTS	9	O	
					TIMA0_C2N	10	O	
					UART1_RX	11	I	
	11	13	13	PA7 PINCM14 0x40428034	PA7	1	IO	SDIO (standard)
					CLK_OUT	3	O	
					TIMG8_C0	4	IO	
					TIMA0_C2	5	IO	
					TIMG8_IDX	6	I	
					TIMA0_C1	8	IO	
					SPI0_CS2	9	IO	
					FCC_IN	10	I	
					SPI0_POCI	11	IO	
	12	16	16	PA8 PINCM19 0x40428048	PA8	1	IO	SDIO (standard)
					UART1_TX	2	O	
					SPI0_CS0	3	IO	
					I2C0_SDA	4	IOD	
					TIMA0_C0	5	IO	
					TIMA_FAL2	6	I	
					TIMA_FAL0	7	I	
					SPI0_CS3	8	IO	
					HFCLK_IN	10	I	
					UART0_RTS	11	O	
8	13	17	17	PA9 PINCM20 0x4042804c	PA9	1	IO	HSIO (high-speed)
					UART1_RX	2	I	
					SPI0_PICO	3	IO	
					I2C0_SCL	4	IOD	
					TIMA0_C0N	5	O	
					CLK_OUT	6	O	
					TIMA0_C1	7	IO	
					RTC_OUT	8	O	
					SPI0_CS0	10	IO	
					UART0_CTS	11	I	

Copyright © 2025 Texas Instruments Incorporated

Table 6-2. Pin Attributes (continued)

RGE PIN	RHB PIN	RGZ PIN	PT PIN	PIN NAME/ IOMUX REG/ IOMUX ADDR	SIGNAL NAME	IOMUX PF	SIGNAL TYPE	BUFFER TYPE
9	14	18	18	PA10 PINCM21 0x40428050	PA10	1	IO	HDIO (high-drive)
					UART0_TX	2	O	
					SPI0_POCI	3	IO	
					I2C0_SDA	4	IOD	
					TIMA0_C2	5	IO	
					CLK_OUT	6	O	
					TIMG0_C0	7	IO	
					TIMA_FAL1	10	I	
					I2C0_SCL	11	IOD	
					BSLTX	(Non-IOMUX 1) 0	O	
					WAKE	(Non-IOMUX 2) 0	I	
10	15	19	19	PA11 PINCM22 0x40428054	PA11	1	IO	HDIO (high-drive)
					UART0_RX	2	I	
					SPI0_SCK	3	IO	
					I2C0_SCL	4	IOD	
					TIMA0_C2N	5	O	
					TIMG0_C1	7	IO	
					TIMA_FAL0	10	I	
					I2C0_SDA	11	IOD	
					BSLRX	(Non-IOMUX 1) 0	I	
					WAKE	(Non-IOMUX 2) 0	I	
	16	27	27	PA12 PINCM34 0x40428084	PA12	1	IO	SDIO (standard)
					SPI0_SCK	3	IO	
					TIMA0_C3	5	IO	
					FCC_IN	6	I	
					TIMG0_C0	7	IO	
					SPI0_CS1	9	IO	
					UART1_CTS	11	I	
					A0_8	(Non-IOMUX 1) 0	A	
	17	28	28	PA13 PINCM35 0x40428088	PA13	1	IO	SDIO (standard)
					SPI0_POCI	3	IO	
					TIMA0_C3N	5	O	
					RTC_OUT	6	O	
					TIMG0_C1	7	IO	
					SPI0_CS3	9	IO	
					UART1_RTS	11	O	
					A0_9	(Non-IOMUX 1) 0	A	
	18	29	29	PA14 PINCM36 0x4042808c	PA14	1	IO	SDIO (standard)
					UART0_CTS	2	I	
					SPI0_PICO	3	IO	
					CLK_OUT	6	O	
					SPI0_CS2	9	IO	
					A0_12	(Non-IOMUX 1) 0	A	

Copyright © 2025 Texas Instruments Incorporated

Table 6-2. Pin Attributes (continued)

RGE PIN	RHB PIN	RGZ PIN	PT PIN	PIN NAME/ IOMUX REG/ IOMUX ADDR	SIGNAL NAME	IOMUX PF	SIGNAL TYPE	BUFFER TYPE
11	19	30	30	PA15 PINCM37 0x40428090	PA15	1	IO	HDIO (high-drive)
					UART0_RTS	2	O	
					TIMA0_C2	5	IO	
					UART0_TX	6	O	
					TIMG8_IDX	7	I	
					TIMG1_C0	8	IO	
					WAKE	(Non-IOMUX 1) 0	I	
12	20	31	31	PA16 PINCM38 0x40428094	PA16	1	IO	HDIO (high-drive)
					TIMA0_C2N	5	O	
					UART0_RX	6	I	
					FCC_IN	7	I	
					TIMG1_C1	8	IO	
					TIMA0_C0	11	IO	
					WAKE	(Non-IOMUX 1) 0	I	
					A0_13	(Non-IOMUX 2) 0	A	
13	21	32	32	PA17 PINCM39 0x40428098	PA17	1	IO	HDIO (high-drive)
					UART1_TX	2	O	
					TIMA0_C3	5	IO	
					TIMG8_C0	6	IO	
					SPI0_CS1	8	IO	
					WAKE	(Non-IOMUX 1) 0	I	
					A0_14	(Non-IOMUX 2) 0	A	
14	22	33	33	PA18 PINCM40 0x4042809c	PA18	1	IO	HDIO (high-drive)
					UART1_RX	2	I	
					TIMA0_C3N	5	O	
					TIMG8_C1	6	IO	
					SPI0_CS0	8	IO	
					TIMA0_C1	11	IO	
					BSL_invoke	(Non-IOMUX 1) 0	I	
					WAKE	(Non-IOMUX 2) 0	I	
					A0_4	(Non-IOMUX 3) 0	A	
15	23	34	34	PA19 PINCM41 0x404280a0	PA19	1	IO	SDIO (standard)
					SWDIO	2	IO	
					TIMA0_C2	5	IO	
					TIMG0_C0	6	IO	
16	24	35	35	PA20 PINCM42 0x404280a4	PA20	1	IO	SDIO (standard)
					SWCLK	2	I	
					TIMA0_C2N	5	O	
					TIMG0_C1	6	IO	
17	25	39	39	PA21 PINCM46 0x404280b4	PA21	1	IO	SDIO (standard)
					SPI0_CS3	3	IO	
					UART1_CTS	4	I	
					TIMA0_C0	5	IO	
					TIMG8_C0	9	IO	
					VREF-	(Non-IOMUX 1) 0	A	

Copyright © 2025 Texas Instruments Incorporated

Table 6-2. Pin Attributes (continued)

RGE PIN	RHB PIN	RGZ PIN	PT PIN	PIN NAME/ IOMUX REG/ IOMUX ADDR	SIGNAL NAME	IOMUX PF	SIGNAL TYPE	BUFFER TYPE
18	26	40	40	PA22 PINCM47 0x404280b8	PA22	1	IO	SDIO (standard)
					SPI0_CS2	3	IO	
					UART1_RTS	4	O	
					TIMA0_C0N	5	O	
					TIMA0_C1	6	IO	
					CLK_OUT	7	O	
					I2C0_SCL	8	IOD	
					TIMG8_C1	9	IO	
					A0_7	(Non-IOMUX 1) 0	A	
19	27	43	43	PA23 PINCM53 0x404280d0	PA23	1	IO	SDIO (standard)
					SPI0_CS3	3	IO	
					TIMA0_C3	5	IO	
					TIMG8_C0	6	IO	
					TIMG0_C0	8	IO	
					VREF+	(Non-IOMUX 1) 0	A	
20	28	44	44	PA24 PINCM54 0x404280d4	PA24	1	IO	SDIO (standard)
					SPI0_CS2	3	IO	
					TIMA0_C3N	5	O	
					TIMG8_C1	6	IO	
					TIMG0_C1	9	IO	
					A0_3	(Non-IOMUX 1) 0	A	
21	29	45	45	PA25 PINCM55 0x404280d8	PA25	1	IO	SDIO (standard)
					TIMA0_C3	5	IO	
					TIMA0_C1N	6	O	
					A0_2	(Non-IOMUX 1) 0	A	
22	30	46	46	PA26 PINCM59 0x404280e8	PA26	1	IO	SDIO (standard)
					TIMG8_C0	4	IO	
					TIMA_FAL0	5	I	
					TIMA0_C3N	6	O	
					A0_1	(Non-IOMUX 1) 0	A	
	31	47	47	PA27 PINCM60 0x404280ec	PA27	1	IO	SDIO (standard)
					TIMG8_C1	4	IO	
					TIMA_FAL2	5	I	
					CLK_OUT	6	O	
					RTC_OUT	7	O	
					A0_0	(Non-IOMUX 1) 0	A	
		3	3	PA28 PINCM3 0x40428008	PA28	1	IO	HDIO (high-drive)
					UART0_TX	2	O	
					I2C0_SDA	3	IOD	
					TIMA0_C3	4	IO	
					TIMA_FAL0	5	I	
					TIMA0_C1	6	IO	
					SPI0_CS3	7	IO	
					WAKE	(Non-IOMUX 1) 0	I	

Copyright © 2025 Texas Instruments Incorporated

Table 6-2. Pin Attributes (continued)

RGE PIN	RHB PIN	RGZ PIN	PT PIN	PIN NAME/ IOMUX REG/ IOMUX ADDR	SIGNAL NAME	IOMUX PF	SIGNAL TYPE	BUFFER TYPE
		5	5	PA31 PINCM6 0x40428014	PA31	1	IO	SDIO (standard with wake)
					UART0_RX	2	I	
					I2C0_SCL	3	IOD	
					TIMA0_C3N	4	O	
					CLK_OUT	6	O	
					SPI0_CS3	7	IO	
					WAKE	(Non-IOMUX 1) 0	I	
		14	14	PB2 PINCM15 0x40428038	PB2	1	IO	SDIO (standard)
					TIMA0_C3	5	IO	
					UART1_CTS	6	I	
					TIMG1_C0	7	IO	
					HFCLK_IN	10	I	
					SPI0_PICO	11	IO	
		15	15	PB3 PINCM16 0x4042803c	PB3	1	IO	SDIO (standard)
					TIMA0_C3N	5	O	
					UART1_RTS	6	O	
					TIMG1_C1	7	IO	
					TIMA0_C0	10	IO	
					SPI0_SCK	11	IO	
		20	20	PB6 PINCM23 0x40428058	PB6	1	IO	SDIO (standard)
					UART1_TX	2	O	
					TIMG8_C0	5	IO	
					TIMA_FAL2	8	I	
					SPI0_CS1	9	IO	
		21	21	PB7 PINCM24 0x4042805c	PB7	1	IO	SDIO (standard)
					UART1_RX	2	I	
					TIMG8_C1	5	IO	
					SPI0_CS2	8	IO	
		22	22	PB8 PINCM25 0x40428060	PB8	1	IO	SDIO (standard)
					UART1_CTS	2	I	
					TIMA0_C0	5	IO	
		23	23	PB9 PINCM26 0x40428064	PB9	1	IO	SDIO (standard)
					UART1_RTS	2	O	
					TIMA0_C0N	5	O	
					TIMA0_C1	6	IO	
		24	24	PB14 PINCM31 0x40428078	PB14	1	IO	SDIO (standard)
					TIMA0_C0	5	IO	
					TIMG8_IDX	6	I	
					SPI0_CS3	7	IO	
		25	25	PB15 PINCM32 0x4042807c	PB15	1	IO	SDIO (standard)
					TIMG8_C0	5	IO	
		26	26	PB16 PINCM33 0x40428080	PB16	1	IO	SDIO (standard)
					TIMG8_C1	5	IO	

Copyright © 2025 Texas Instruments Incorporated

Table 6-2. Pin Attributes (continued)

RGE PIN	RHB PIN	RGZ PIN	PT PIN	PIN NAME/ IOMUX REG/ IOMUX ADDR	SIGNAL NAME	IOMUX PF	SIGNAL TYPE	BUFFER TYPE
		36	36	PB17 PINCM43 0x404280a8	PB17	1	IO	SDIO (standard)
					SPI0_PICO	3	IO	
					I2C0_SCL	4	IOD	
					TIMA0_C2	5	IO	
					TIMG0_C0	6	IO	
		37	37	PB18 PINCM44 0x404280ac	PB18	1	IO	SDIO (standard)
					SPI0_SCK	3	IO	
					I2C0_SDA	4	IOD	
					TIMA0_C2N	5	O	
					TIMG0_C1	6	IO	
		38	38	PB19 PINCM45 0x404280b0	PB19	1	IO	SDIO (standard)
					SPI0_POCI	3	IO	
					TIMG8_C1	4	IO	
					UART0_CTS	5	I	
					TIMG8_IDX	7	I	
					A0_5	(Non-IOMUX 1) 0	A	
		41	41	PB20 PINCM48 0x404280bc	PB20	1	IO	SDIO (standard)
					SPI0_CS2	2	IO	
					TIMA0_C2	5	IO	
					TIMA_FAL1	6	I	
					TIMA0_C1	7	IO	
					I2C0_SDA	9	IOD	
					A0_6	(Non-IOMUX 1) 0	A	
		42	42	PB24 PINCM52 0x404280cc	PB24	1	IO	SDIO (standard)
					SPI0_CS3	2	IO	
					SPI0_CS1	3	IO	
					TIMA0_C3	5	IO	
					TIMA0_C1N	6	O	
					UART0_TX	10	O	
					UART0_RX	11	I	
23	32	48	48	VCORE	VCORE	(Non-IOMUX 1) 0	PWR	PWR
3	4	6	6	VDD	VDD	(Non-IOMUX 1) 0	PWR	PWR
4	5	7	7	VSS	VSS	(Non-IOMUX 1) 0	PWR	PWR

6.3 Signal Descriptions

Many MSPM0 signals are made available on multiple device pins. The following list describes the column headers:

1. **SIGNAL NAME**: The name of the signal which can be connected to one of the specified pins.
2. **PIN TYPE**: The signal direction and signal type:
   - I = Input
   - O = Output
   - IO = Input, output, or simultaneous input and output
   - ID = Input with open-drain behavior
   - OD = Output with open-drain behavior
   - IOD = Input, output, or simultaneous input and output with open-drain behavior
   - A = Analog
   - PWR = Power function

Copyright © 2025 Texas Instruments Incorporated

3. **DESCRIPTION**: A description of the signal.
4. **PIN**: Associated pin number.

For additional information on the pin multiplexing scheme, refer to the IOMUX chapter of the *MSPM0 L-Series 32-MHz Microcontrollers Technical Reference Manual*.

Note

The IOMUX only supports connecting one IOMUX-managed digital function to the pin at the same time. However, non-IOMUX managed signals (such as analog inputs and WAKE inputs) can be enabled on a pin at the same time that an IOMUX managed digital function is enabled on the pin. In this case, the designer must verify that no contention exists between the functions enabled on each pin.

Table 6-3. Analog to Digital Converter (ADC) Signal Descriptions

SIGNAL NAME	PIN TYPE	DESCRIPTION	RGE PIN	RHB PIN	RGZ PIN	PT PIN
A0_0	A	ADC0 analog input channel 0		31	47	47
A0_1	A	ADC0 analog input channel 1	22	30	46	46
A0_2	A	ADC0 analog input channel 2	21	29	45	45
A0_3	A	ADC0 analog input channel 3	20	28	44	44
A0_4	A	ADC0 analog input channel 4	14	22	33	33
A0_5	A	ADC0 analog input channel 5			38	38
A0_6	A	ADC0 analog input channel 6			41	41
A0_7	A	ADC0 analog input channel 7	18	26	40	40
A0_8	A	ADC0 analog input channel 8		16	27	27
A0_9	A	ADC0 analog input channel 9		17	28	28
A0_12	A	ADC0 analog input channel 12		18	29	29
A0_13	A	ADC0 analog input channel 13	12	20	31	31
A0_14	A	ADC0 analog input channel 14	13	21	32	32

Table 6-4. Bootstrap Loader (BSL) Signal Descriptions

SIGNAL NAME	PIN TYPE	DESCRIPTION	RGE PIN	RHB PIN	RGZ PIN	PT PIN
BSLRX	I	BSL UART receive signal (RXD)	10	15	19	19
BSLSCL	IOD	BSL I2C clock signal (SCL)	1	2	2	2
BSLSDA	IOD	BSL I2C data signal (SDA)	24	1	1	1
BSLTX	O	BSL UART transmit signal (TXD)	9	14	18	18
BSL_invoke	I	BSL invoke signal (if BSL is enabled, must be HIGH during BOOTRST for a BSL entry, and LOW during BOOTRST to prevent BSL entry)	14	22	33	33

Table 6-5. Clock Module (CKM) Signal Descriptions

SIGNAL NAME	PIN TYPE	DESCRIPTION	RGE PIN	RHB PIN	RGZ PIN	PT PIN
CLK_OUT	O	CLK_OUT digital clock output from the PMCU	18, 8, 9	11, 13, 14, 18, 26, 31	13, 17, 18, 29, 40, 47, 5	13, 17, 18, 29, 40, 47, 5
FCC_IN	I	Frequency clock counter (FCC) input signal	12, 24	1, 11, 16, 20, 9	1, 11, 13, 27, 31	1, 11, 13, 27, 31
HFCLK_IN	I	High frequency clock digital clock input signal		10, 12	12, 14, 16	12, 14, 16
LFCLK_IN	I	Low frequency clock digital clock input signal	7	8	10	10

Copyright © 2025 Texas Instruments Incorporated

Table 6-5. Clock Module (CKM) Signal Descriptions (continued)

SIGNAL NAME	PIN TYPE	DESCRIPTION	RGE PIN	RHB PIN	RGZ PIN	PT PIN
LFXIN	A	Low frequency crystal oscillator (LFXT) signal	6	7	9	9
LFXOUT	A	Low frequency crystal oscillator (LFXT) signal	7	8	10	10
ROSC	A	SYSOSC frequency correction loop (FCL) external resistor signal	5	6	8	8

Table 6-6. General Purpose Input Output Module Signal Descriptions

SIGNAL NAME	PIN TYPE	DESCRIPTION	RGE PIN	RHB PIN	RGZ PIN	PT PIN
PA0	IO	GPIO port A input/output 0	24	1	1	1
PA1	IO	GPIO port A input/output 1	1	2	2	2
PA2	IO	GPIO port A input/output 2	5	6	8	8
PA3	IO	GPIO port A input/output 3	6	7	9	9
PA4	IO	GPIO port A input/output 4	7	8	10	10
PA5	IO	GPIO port A input/output 5		9	11	11
PA6	IO	GPIO port A input/output 6		10	12	12
PA7	IO	GPIO port A input/output 7		11	13	13
PA8	IO	GPIO port A input/output 8		12	16	16
PA9	IO	GPIO port A input/output 9	8	13	17	17
PA10	IO	GPIO port A input/output 10	9	14	18	18
PA11	IO	GPIO port A input/output 11	10	15	19	19
PA12	IO	GPIO port A input/output 12		16	27	27
PA13	IO	GPIO port A input/output 13		17	28	28
PA14	IO	GPIO port A input/output 14		18	29	29
PA15	IO	GPIO port A input/output 15	11	19	30	30
PA16	IO	GPIO port A input/output 16	12	20	31	31
PA17	IO	GPIO port A input/output 17	13	21	32	32
PA18	IO	GPIO port A input/output 18	14	22	33	33
PA19	IO	GPIO port A input/output 19	15	23	34	34
PA20	IO	GPIO port A input/output 20	16	24	35	35
PA21	IO	GPIO port A input/output 21	17	25	39	39
PA22	IO	GPIO port A input/output 22	18	26	40	40
PA23	IO	GPIO port A input/output 23	19	27	43	43
PA24	IO	GPIO port A input/output 24	20	28	44	44
PA25	IO	GPIO port A input/output 25	21	29	45	45
PA26	IO	GPIO port A input/output 26	22	30	46	46
PA27	IO	GPIO port A input/output 27		31	47	47
PA28	IO	GPIO port A input/output 28			3	3
PA31	IO	GPIO port A input/output 31			5	5
PB2	IO	GPIO port B input/output 2			14	14
PB3	IO	GPIO port B input/output 3			15	15
PB6	IO	GPIO port B input/output 6			20	20
PB7	IO	GPIO port B input/output 7			21	21
PB8	IO	GPIO port B input/output 8			22	22
PB9	IO	GPIO port B input/output 9			23	23
PB14	IO	GPIO port B input/output 14			24	24

Copyright © 2025 Texas Instruments Incorporated

Table 6-6. General Purpose Input Output Module Signal Descriptions (continued)

SIGNAL NAME	PIN TYPE	DESCRIPTION	RGE PIN	RHB PIN	RGZ PIN	PT PIN
PB15	IO	GPIO port B input/output 15			25	25
PB16	IO	GPIO port B input/output 16			26	26
PB17	IO	GPIO port B input/output 17			36	36
PB18	IO	GPIO port B input/output 18			37	37
PB19	IO	GPIO port B input/output 19			38	38
PB20	IO	GPIO port B input/output 20			41	41
PB24	IO	GPIO port B input/output 24			42	42

Table 6-7. I2C Signal Descriptions

SIGNAL NAME	PIN TYPE	DESCRIPTION	RGE PIN	RHB PIN	RGZ PIN	PT PIN
I2C0_SCL	IOD	I2C0 serial clock signal (SCL)	1, 10, 18, 8, 9	13, 14, 15, 2, 26	17, 18, 19, 2, 36, 40, 5	17, 18, 19, 2, 36, 40, 5
I2C0_SDA	IOD	I2C0 serial data signal (SDA)	10, 24, 9	1, 12, 14, 15	1, 16, 18, 19, 3, 37, 41	1, 16, 18, 19, 3, 37, 41

Table 6-8. IOMUX Signal Descriptions

SIGNAL NAME	PIN TYPE	DESCRIPTION	RGE PIN	RHB PIN	RGZ PIN	PT PIN
WAKE	I	Input signal to wake the device from SHUTDOWN mode	1, 10, 11, 12, 13, 14, 2, 24, 9	1, 14, 15, 19, 2, 20, 21, 22, 3	1, 18, 19, 2, 3, 30, 31, 32, 33, 4, 5	1, 18, 19, 2, 3, 30, 31, 32, 33, 4, 5

Table 6-9. Power Management Unit (PMU) Signal Descriptions

SIGNAL NAME	PIN TYPE	DESCRIPTION	RGE PIN	RHB PIN	RGZ PIN	PT PIN
VCORE	PWR	VCORE capacitor connection	23	32	48	48
VDD	PWR	VDD supply	3	4	6	6
VSS	PWR	VSS (ground)	4	5	7	7

Table 6-10. Real-time Clock (RTC) Signal Descriptions

SIGNAL NAME	PIN TYPE	DESCRIPTION	RGE PIN	RHB PIN	RGZ PIN	PT PIN
RTC_OUT	O	Real-time clock output signal	8	13, 17, 31	17, 28, 47	17, 28, 47

Table 6-11. Serial Peripheral Interface (SPI) Signal Descriptions

SIGNAL NAME	PIN TYPE	DESCRIPTION	RGE PIN	RHB PIN	RGZ PIN	PT PIN
SPI0_PICO	IO	SPI0 peripheral in controller out signal	8	13, 18, 9	11, 14, 17, 29, 36	11, 14, 17, 29, 36
SPI0_POCI	IO	SPI0 peripheral out controller in signal	7, 9	11, 14, 17, 8, 9	10, 11, 13, 18, 28, 38	10, 11, 13, 18, 28, 38
SPI0_SCK	IO	SPI0 serial clock	10	10, 15, 16	12, 15, 19, 27, 37	12, 15, 19, 27, 37

Copyright © 2025 Texas Instruments Incorporated

Table 6-11. Serial Peripheral Interface (SPI) Signal Descriptions (continued)

SIGNAL NAME	PIN TYPE	DESCRIPTION	RGE PIN	RHB PIN	RGZ PIN	PT PIN
SPI0_CS0	IO	SPI0 chip select 0 signal	14, 5, 7, 8	12, 13, 22, 6, 8	10, 16, 17, 33, 8	10, 16, 17, 33, 8
SPI0_CS1	IO	SPI0 chip select 1 signal	13, 6	16, 21, 7	20, 27, 32, 42, 9	20, 27, 32, 42, 9
SPI0_CS2	IO	SPI0 chip select 2 signal	18, 20	11, 18, 26, 28	13, 21, 29, 40, 41, 44	13, 21, 29, 40, 41, 44
SPI0_CS3	IO	SPI0 chip select 3 signal	1, 17, 19, 6	12, 17, 2, 25, 27, 7	16, 2, 24, 28, 3, 39, 42, 43, 5, 9	16, 2, 24, 28, 3, 39, 42, 43, 5, 9

Table 6-12. Serial Wire Debug (SWD) Signal Descriptions

SIGNAL NAME	PIN TYPE	DESCRIPTION	RGE PIN	RHB PIN	RGZ PIN	PT PIN
SWCLK	I	Serial wire debug interface clock input signal	16	24	35	35
SWDIO	IO	Serial wire debug interface data input/output signal	15	23	34	34

Table 6-13. System Controller (SYSCTL) Signal Descriptions

SIGNAL NAME	PIN TYPE	DESCRIPTION	RGE PIN	RHB PIN	RGZ PIN	PT PIN
NRST	I	Active-low reset signal (must be logic high for the device to start)	2	3	4	4

Table 6-14. Timer (TIMx) Signal Descriptions

SIGNAL NAME	PIN TYPE	DESCRIPTION	RGE PIN	RHB PIN	RGZ PIN	PT PIN
TIMA0_C0	IO	TIMA0 capture/compare 0 signal	12, 17, 24, 5	1, 12, 20, 25, 6	1, 15, 16, 22, 24, 31, 39, 8	1, 15, 16, 22, 24, 31, 39, 8
TIMA0_C1	IO	TIMA0 capture/compare 1 signal	1, 14, 18, 6, 8	11, 13, 2, 22, 26, 7	13, 17, 2, 23, 3, 33, 40, 41, 9	13, 17, 2, 23, 3, 33, 40, 41, 9
TIMA0_C2	IO	TIMA0 capture/compare 2 signal	11, 15, 6, 9	11, 14, 19, 23, 7	13, 18, 30, 34, 36, 41, 9	13, 18, 30, 34, 36, 41, 9
TIMA0_C3	IO	TIMA0 capture/compare 3 signal	13, 19, 21, 7	16, 21, 27, 29, 8	10, 14, 27, 3, 32, 42, 43, 45	10, 14, 27, 3, 32, 42, 43, 45
TIMA0_C0N	O	TIMA0 capture/compare 0 complementary output	18, 8	13, 26	17, 23, 40	17, 23, 40
TIMA0_C1N	O	TIMA0 capture/compare 1 complementary output	21, 7	29, 8	10, 42, 45	10, 42, 45
TIMA0_C2N	O	TIMA0 capture/compare 2 complementary output	10, 12, 16, 5	10, 15, 20, 24, 6	12, 19, 31, 35, 37, 8	12, 19, 31, 35, 37, 8
TIMA0_C3N	O	TIMA0 capture/compare 3 complementary output	14, 20, 22, 5	17, 22, 28, 30, 6	15, 28, 33, 44, 46, 5, 8	15, 28, 33, 44, 46, 5, 8
TIMA_FAL0	I	Timer fault input 0	10, 22, 5	10, 12, 15, 30, 6	12, 16, 19, 3, 46, 8	12, 16, 19, 3, 46, 8

Copyright © 2025 Texas Instruments Incorporated

Table 6-14. Timer (TIMx) Signal Descriptions (continued)

SIGNAL NAME	PIN TYPE	DESCRIPTION	RGE PIN	RHB PIN	RGZ PIN	PT PIN
TIMA_FAL1	I	Timer fault input 1	24, 5, 9	1, 14, 6, 9	1, 11, 18, 41, 8	1, 11, 18, 41, 8
TIMA_FAL2	I	Timer fault input 2	1	12, 2, 31	16, 2, 20, 47	16, 2, 20, 47
TIMG8_IDX	I	TIMG8 quadrature encoder index pulse signal	1, 11	11, 19, 2	13, 2, 24, 30, 38	13, 2, 24, 30, 38
TIMG0_C0	IO	TIMG0 capture/compare 0 signal	15, 19, 24, 9	1, 14, 16, 23, 27, 9	1, 11, 18, 27, 34, 36, 43	1, 11, 18, 27, 34, 36, 43
TIMG0_C1	IO	TIMG0 capture/compare 1 signal	1, 10, 16, 20	10, 15, 17, 2, 24, 28	12, 19, 2, 28, 35, 37, 44	12, 19, 2, 28, 35, 37, 44
TIMG1_C0	IO	TIMG1 capture/compare 0 signal	11	19	14, 30	14, 30
TIMG1_C1	IO	TIMG1 capture/compare 1 signal	12	20	15, 31	15, 31
TIMG8_C0	IO	TIMG8 capture/compare 0 signal	1, 13, 17, 19, 22, 6	11, 2, 21, 25, 27, 30, 7, 9	11, 13, 2, 20, 25, 32, 39, 43, 46, 9	11, 13, 2, 20, 25, 32, 39, 43, 46, 9
TIMG8_C1	IO	TIMG8 capture/compare 1 signal	14, 18, 20, 24, 5, 7	1, 10, 22, 26, 28, 31, 6, 8	1, 10, 12, 21, 26, 33, 38, 40, 44, 47, 8	1, 10, 12, 21, 26, 33, 38, 40, 44, 47, 8

Table 6-15. Universal Asynchronous Receiver Transmitter (UART) Signal Descriptions

SIGNAL NAME	PIN TYPE	DESCRIPTION	RGE PIN	RHB PIN	RGZ PIN	PT PIN
UART0_CTS	I	UART0 clear to send signal	8	13, 18, 9	11, 17, 29, 38	11, 17, 29, 38
UART0_RTS	O	UART0 ready to send signal	11	10, 12, 19	12, 16, 30	12, 16, 30
UART0_RX	I	UART0 receive signal (RXD)	1, 10, 12	15, 2, 20	19, 2, 31, 42, 5	19, 2, 31, 42, 5
UART0_TX	O	UART0 transmit signal (TXD)	11, 24, 9	1, 14, 19	1, 18, 3, 30, 42	1, 18, 3, 30, 42
UART1_CTS	I	UART1 clear to send signal	17	16, 25	14, 22, 27, 39	14, 22, 27, 39
UART1_RTS	O	UART1 ready to send signal	18	17, 26	15, 23, 28, 40	15, 23, 28, 40
UART1_RX	I	UART1 receive signal (RXD)	14, 7, 8	10, 13, 22, 8	10, 12, 17, 21, 33	10, 12, 17, 21, 33
UART1_TX	O	UART1 transmit signal (TXD)	13, 6	12, 21, 7, 9	11, 16, 20, 32, 9	11, 16, 20, 32, 9

Table 6-16. Voltage Reference Signal Descriptions

SIGNAL NAME	PIN TYPE	DESCRIPTION	RGE PIN	RHB PIN	RGZ PIN	PT PIN
VREF+	A	Voltage reference positive input	19	27	43	43
VREF-	A	Voltage reference negative input	17	25	39	39

Copyright © 2025 Texas Instruments Incorporated

6.4 Connections for Unused Pins

Table 6-17 lists the correct termination of unused pins.

Table 6-17. Connection of Unused Pins

PIN (1)	POTENTIAL	COMMENT
PAx, PBx	Open	Set corresponding pin functions to GPIO (PINCMx.PF = 0x1) and configure unused pins to output low or input with internal pullup or pulldown resistor.
NRST	VCC	NRST is an active-low reset signal; the pin must be pulled high to VCC or the device cannot start. For more information, see Section 9.1.

(1) Any unused pin with a function that is shared with general-purpose I/O must follow the "PAx, PBx" unused pin connection guidelines.

Copyright © 2025 Texas Instruments Incorporated

7 Specifications

7.1 Absolute Maximum Ratings

over operating free-air temperature range (unless otherwise noted)(1)

			MIN	MAX	UNIT
VDD	Supply voltage	At VDD pin	–0.3	4.1	V
V_I	Input voltage	Applied to any 5-V tolerant open-drain pins	–0.3	5.5	V
V_I	Input voltage	Applied to any common tolerance pins	–0.3	V_{DD} + 0.3 (4.1 MAX)	V
I_{VDD} (3)	Current into VDD pin (source)	-40 °C ≤ T_j ≤ 130 °C		80	mA
	Current into VDD pin (source)	-40 °C ≤ Tj ≤ 90 °C		100	mA
I_{VSS} (3)	Current out of VSS pin (sink)	-40 °C ≤ T_j ≤ 130 °C		80	mA
	Current out of VSS pin (sink)	-40 °C ≤ Tj ≤ 90 °C		100	mA
I_{IO}	Current of SDIO pin	Current sunk or sourced by SDIO pin, VDD>=2.7V		6	mA
	Current of HSIO pin	Current sunk or sourced by HSIO pin, VDD>=2.7V		6	mA
	Current of HDIO pin	Current sunk or sourced by HDIO pin		20	mA
	Current of ODIO pin	Current sunk by ODIO pin		20	mA
I_D	Supported diode current	Diode current at any device pin (excluding Open Drain IO and PB24)	-2	2	mA
		Diode current at PB24 IO pin	-2	0.05	mA
T_A	Ambient temperature	Ambient temperature	-40	125	°C
T_J	Junction temperature	Junction temperature	-40	130	°C
T_{stg}	Storage temperature(2)	Storage temperature(2)	–40	150	°C

(1) Operation outside the Absolute Maximum Ratings may cause permanent device damage. Absolute Maximum Ratings do not imply functional operation of the device at these or any other conditions beyond those listed under Recommended Operating Conditions. If used outside the Recommended Operating Conditions but within the Absolute Maximum Ratings, the device may not be fully functional, and this may affect device reliability, functionality, performance, and shorten the device lifetime
(2) Higher temperatures may be applied during board soldering according to the current JEDEC J-STD-020 specification with peak reflow temperatures not higher than classified on the device label on the shipping boxes or reels.
(3) For applications running at VDD=1.62V, I_VDD/I_VSS<=20mA is required to ensure device functionality

7.2 ESD Ratings

			VALUE	UNIT
$V_{(ESD)}$	Electrostatic discharge	Human body model (HBM), per ANSI/ESDA/ JEDEC JS-001, all pins(1)	±2000	V
		Charged device model (CDM), per JEDEC specification JESD22-C101, all pins(2)	±500	V

(1) JEDEC document JEP155 states that 500-V HBM allows safe manufacturing with a standard ESD control process.
(2) JEDEC document JEP157 states that 250-V CDM allows safe manufacturing with a standard ESD control process.

7.3 Recommended Operating Conditions

over operating free-air temperature range (unless otherwise noted)

		MIN	NOM	MAX	UNIT
VDD	Supply voltage	1.62		3.6	V
VCORE	Voltage on VCORE pin (2)		1.35		V
C_{VDD}	Capacitor connected between VDD and VSS (1)		10		uF
C_{VCORE}	Capacitor connected between VCORE and VSS (1) (2)		470		nF

Copyright © 2025 Texas Instruments Incorporated

over operating free-air temperature range (unless otherwise noted)

		MIN	NOM	MAX	UNIT
T_A	Ambient temperature	–40		125	°C
T_J	Max junction temperature			130	°C
f_{MCLK}	MCLK, CPUCLK, ULPCLK frequency with 1 flash wait state (3)			32	MHz
	MCLK, CPUCLK, ULPCLK frequency with 0 flash wait states (3)			24	MHz

(1) Connect C_{VDD} and C_{VCORE} between VDD/VSS and VCORE/VSS, respectively, as close to the device pins as possible. A low-ESR capacitor with at least the specified value and tolerance of ±20% or better is required for C_{VDD} and C_{VCORE}.
(2) The VCORE pin must only be connected to C_{VCORE}. Do not supply any voltage or apply any external load to the VCORE pin.
(3) Wait states are managed automatically by the system controller (SYSCTL) and do not need to be configured by application software unless MCLK is sourced from a high speed clock source (HSCLK sourced from HFCLK).

7.4 Thermal Information

THERMAL METRIC(1)		PACKAGE	VALUE	UNIT
$R_{\theta JA}$	Junction-to-ambient thermal resistance	LQFP-48 (PT)	76.8	°C/W
$R_{\theta JC(top)}$	Junction-to-case (top) thermal resistance		33.1	°C/W
$R_{\theta JB}$	Junction-to-board thermal resistance		48.5	°C/W
Ψ_{JT}	Junction-to-top characterization parameter		2.9	°C/W
Ψ_{JB}	Junction-to-board characterization parameter		48	°C/W
$R_{\theta JC(bot)}$	Junction-to-case (bottom) thermal resistance		N/A	°C/W
$R_{\theta JA}$	Junction-to-ambient thermal resistance	VQFN-48 (RGZ)	32.5	°C/W
$R_{\theta JC(top)}$	Junction-to-case (top) thermal resistance		23.1	°C/W
$R_{\theta JB}$	Junction-to-board thermal resistance		14.8	°C/W
Ψ_{JT}	Junction-to-top characterization parameter		0.6	°C/W
Ψ_{JB}	Junction-to-board characterization parameter		14.7	°C/W
$R_{\theta JC(bot)}$	Junction-to-case (bottom) thermal resistance		6.3	°C/W
$R_{\theta JA}$	Junction-to-ambient thermal resistance	VQFN-32 (RHB)	35.2	°C/W
$R_{\theta JC(top)}$	Junction-to-case (top) thermal resistance		27.8	°C/W
$R_{\theta JB}$	Junction-to-board thermal resistance		16.2	°C/W
Ψ_{JT}	Junction-to-top characterization parameter		0.7	°C/W
Ψ_{JB}	Junction-to-board characterization parameter		16.1	°C/W
$R_{\theta JC(bot)}$	Junction-to-case (bottom) thermal resistance		6.3	°C/W
$R_{\theta JA}$	Junction-to-ambient thermal resistance	VQFN-24 (RGE)	43.6	°C/W
$R_{\theta JC(top)}$	Junction-to-case (top) thermal resistance		36.8	°C/W
$R_{\theta JB}$	Junction-to-board thermal resistance		20.9	°C/W
Ψ_{JT}	Junction-to-top characterization parameter		0.9	°C/W
Ψ_{JB}	Junction-to-board characterization parameter		20.8	°C/W
$R_{\theta JC(bot)}$	Junction-to-case (bottom) thermal resistance		6.3	°C/W

(1) For more information about traditional and new thermal metrics, see the Semiconductor and IC Package Thermal Metrics application report.

7.5 Supply Current Characteristics

7.5.1 RUN/SLEEP Modes

VDD=3.3V. All inputs tied to 0V or VDD. Outputs do not source or sink any current. All peripherals are disabled.

PARAMETER	MCLK	-40°C		25°C		85°C		105°C		125°C		UNIT
		TYP	MAX	TYP	MAX	TYP	MAX	TYP	MAX	TYP	MAX	
RUN Mode												

VDD=3.3V. All inputs tied to 0V or VDD. Outputs do not source or sink any current. All peripherals are disabled.

PARAMETER		MCLK	-40°C		25°C		85°C		105°C		125°C		UNIT
			TYP	MAX	TYP	MAX	TYP	MAX	TYP	MAX	TYP	MAX	
IDD_{RUN}	MCLK=SYSOSC, CoreMark, execute from flash	32MHz	3.4		3.4		3.4		3.4		3.4		mA
		4MHz	0.7		0.7		0.7		0.7		0.7		
IDD_{RUN}, per MHz	MCLK=SYSOSC, CoreMark, execute from flash	32MHz	105		106		106		107		107		uA/MHz
		4MHz	169		170		173		176		184		
	MCLK=SYSOSC, While(1), execute from flash	32MHz	65	74	66	75	66	77	67	80	68	83	
SLEEP Mode													
IDD_{SLEEP}	MCLK=SYSOSC, CPU is halted	32MHz	1594	1730	1614	1780	1624	1800	1633	1860	1656	1920	uA
		4MHz	473	590	481	595	492	610	504	715	533	810	
	MCLK=LFCLK, CPU is halted	32KHz	278	340	283	345	289	380	300	450	335	556	
IDD_{SLEEP}, per MHz	MCLK=SYSOSC, CPU is halted	32MHz	50		50		51		51		52		uA/MHz

7.5.2 STOP/STANDBY Modes

VDD=3.3V. All inputs tied to 0V or VDD. Outputs do not source or sink any current. All peripherals not noted are disabled.

PARAMETER		ULPCLK	-40°C		25°C		85°C		105°C		125°C		UNIT
			TYP	MAX	TYP	MAX	TYP	MAX	TYP	MAX	TYP	MAX	
STOP Mode													
IDD_{STOP0}	SYSOSC=32MHz, USE4MHZSTOP=0, DISABLESTOP=0	4MHz	698	760	712	780	716	785	719	790	721	795	uA
IDD_{STOP1}	SYSOSC=4MHz, USE4MHZSTOP=1, DISABLESTOP=0		232	255	239	260	245	268	250	278	257	290	
IDD_{STOP2}	SYSOSC off, DISABLESTOP=1, ULPCLK=LFCLK	32kHz	51	60	55	64	58	68	61	79	70	92	
STANDBY Mode													
IDD_{STBY0}	LFCLK=LFXT, STOPCLKSTBY=0, RTC enabled	32kHz	1.7	2	1.8	2.2	4	8	7	17	14	31	uA
IDD_{STBY1}	LFCLK=LFOSC, STOPCLKSTBY=1, RTC enabled		1.4	1.7	1.5	1.8	3	7	6	17	13	31	
	LFCLK=LFXT, STOPCLKSTBY=1, RTC enabled		1.4	1.7	1.5	1.8	3	7	6	17	13	31	
	LFCLK=LFXT, STOPCLKSTBY=1, GPIOA enabled		1.4	1.7	1.5	1.8	3	7	6	17	13	31	

7.5.3 SHUTDOWN Mode

All inputs tied to 0V or VDD. Outputs do not source or sink any current. Core regulator is powered down.

PARAMETER		VDD	-40°C		25°C		85°C		105°C		125°C		UNIT
			TYP	MAX	TYP	MAX	TYP	MAX	TYP	MAX	TYP	MAX	
IDD_{SHDN}	Supply current in SHUTDOWN mode	3.3V	57		75		464		1069		2961		nA

Copyright © 2025 Texas Instruments Incorporated

7.6 Power Supply Sequencing

7.6.1 Power Supply Ramp

Figure 7-1 shows the relationships of POR-, POR+, BOR0-, and BOR0+ during powerup and powerdown.

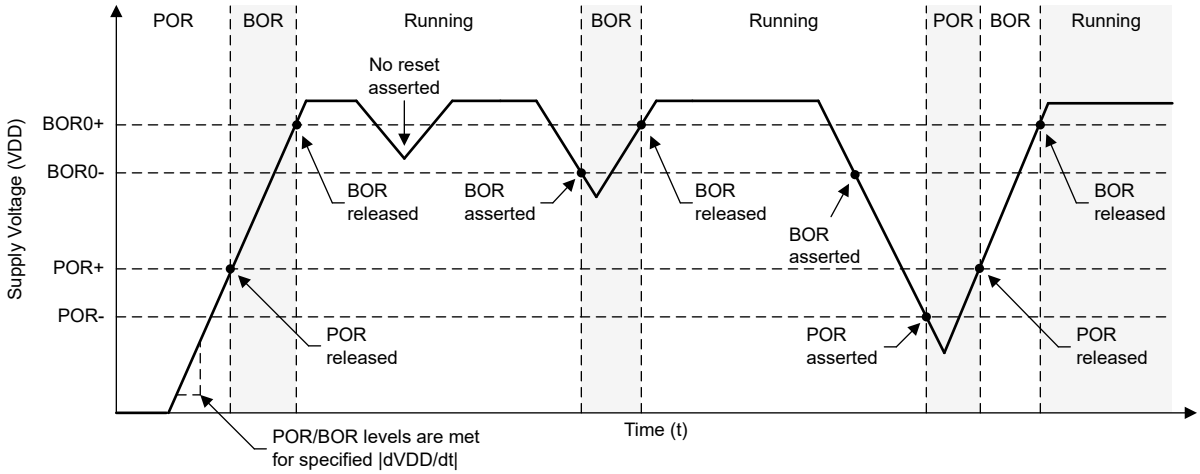

Figure 7-1. Power Cycle POR and BOR Conditions - VDD

7.6.2 POR and BOR

over operating free-air temperature range (unless otherwise noted)

PARAMETER		TEST CONDITIONS	MIN	TYP	MAX	UNIT
dVDD/dt	VDD (supply voltage) slew rate	Rising			0.1	V/us
		Falling (1)			0.01	
		Falling, STANDBY			0.1	V/ms
V_{POR+}	Power-on reset voltage level	Rising	0.95	1.30	1.59	V
V_{POR-}		Falling	0.9	1.25	1.54	V
$V_{HYS, POR}$	POR hysteresis		30	58	74	mV
$V_{BOR0+, COLD}$	Brown-out reset voltage level 0 (default level)	-40 °C ≤ T_a ≤ 25 °C Cold start, rising	1.50	1.56	1.63	V
		25 °C ≤ T_a ≤ 125 °C Cold start, rising	1.51	1.58	1.65	
V_{BOR0+}		Rising(1)	1.56	1.59	1.62	
V_{BOR0-}		Falling(1)	1.55	1.58	1.61	
$V_{BOR0, STBY}$		STANDBY mode	1.51	1.56	1.61	
V_{BOR1+}	Brown-out-reset voltage level 1	Rising(1)	2.13	2.17	2.21	V
V_{BOR1-}		Falling(1)	2.10	2.14	2.18	
$V_{BOR1, STBY}$		STANDBY mode	2.06	2.13	2.20	
V_{BOR2+}	Brown-out-reset voltage level 2	Rising(1)	2.73	2.77	2.82	V
V_{BOR2-}		Falling(1)	2.7	2.74	2.79	
$V_{BOR2, STBY}$		STANDBY mode	2.62	2.71	2.8	
V_{BOR3+}	Brown-out-reset voltage level 3	Rising(1)	2.88	2.96	3.04	V
V_{BOR3-}		Falling(1)	2.85	2.93	3.01	
$V_{BOR3, STBY}$		STANDBY mode	2.82	2.92	3.02	
$V_{HYS,BOR}$	Brown-out reset hysteresis	Level 0		15	21	mV
		Levels 1-3		34	40	

Copyright © 2025 Texas Instruments Incorporated

over operating free-air temperature range (unless otherwise noted)

PARAMETER		TEST CONDITIONS	MIN	TYP	MAX	UNIT
$T_{PD, BOR}$	BOR propagation delay	RUN/SLEEP/STOP mode			5	us
		STANDBY mode			100	us

(1) Device operating in RUN, SLEEP, or STOP mode.

7.7 Flash Memory Characteristics

over operating free-air temperature range (unless otherwise noted)

PARAMETER		TEST CONDITIONS	MIN	TYP	MAX	UNIT
Supply						
$VDD_{PGM/ERASE}$	Program and erase supply voltage		1.62		3.6	V
IDD_{ERASE}	Supply current from VDD during erase operation	Supply current delta			10	mA
IDD_{PGM}	Supply current from VDD during program operation	Supply current delta			10	mA
Endurance						
NWEC(HI_ENDURANCE)	Erase/program cycle endurance for chosen 32 sectors of flash (1)		100			k cycles
NWEC (NORMAL_ENDURANCE)	Erase/program cycle endurance (Flash not used for HI_ENDURANCE) (1)		10			k cycles
$NE_{(MAX)}$	Total erase operations before failure (2)		802			k erase operations
$NW_{(MAX)}$	Write operations per word line before sector erase (3)				83	write operations
Retention						
t_{RET_85}	Flash memory data retention	-40°C <= Tj <= 85°C	60			years
t_{RET_105}	Flash memory data retention	-40°C <= Tj <= 105°C	11.4			years
Program and Erase Timing						
$t_{PROG\ (WORD,\ 64)}$	Program time for flash word (4) (6)			50	275	µs
$t_{PROG\ (SEC,\ 64)}$	Program time for 1kB sector (5) (6)			6.4		ms
$t_{ERASE\ (SEC)}$	Sector erase time	≤2k erase/program cycles, T_j≥25°C		4	20	ms
$t_{ERASE\ (SEC)}$	Sector erase time	≤10k erase/program cycles, T_j≥25°C		20	150	ms
$t_{ERASE\ (SEC)}$	Sector erase time	<10k erase/program cycles		20	200	ms
$t_{ERASE\ (BANK)}$	Bank erase time	<10k erase/program cycles		22	220	ms

(1) Up to 32 application-chosen sectors from the main flash bank(s) or data bank can be used as high endurance sectors. This enables applications that frequently update flash data such as EEPROM emulation.
(2) Total number of cumulative erase operations supported by the flash before failure. A sector erase or bank erase operation is considered to be one erase operation.
(3) Maximum number of write operations allowed per word line before the word line must be erased. If additional writes to the same word line are required, a sector erase is required once the maximum number of write operations per word line is reached.
(4) Program time is defined as the time from when the program command is triggered until the command completion interrupt flag is set in the flash controller.
(5) Sector program time is defined as the time from when the first word program command is triggered until the final word program command completes and the interrupt flag is set in the flash controller. This time includes the time needed for software to load each flash word (after the first flash word) into the flash controller during programming of the sector.
(6) Flash word size is 64 data bits (8 bytes). On devices with ECC, the total flash word size is 72 bits (64 data bits plus 8 ECC bits).

Copyright © 2025 Texas Instruments Incorporated

7.8 Timing Characteristics

VDD=3.3V, T_a=25℃ (unless otherwise noted)

PARAMETER		TEST CONDITIONS	MIN	TYP	MAX	UNIT
Wakeup Timing						
$t_{WAKE, SLEEP}$	Wakeup time from SLEEP0 to RUN (1)			1.2		us
	Wakeup time from SLEEP1 to RUN (1)			1.5		
	Wakeup time from SLEEP2 to RUN (1)			2.1		
$t_{WAKE, STOP}$	Wakeup time from STOP0 to RUN (SYSOSC enabled) (1)			7		us
	Wakeup time from STOP1 to RUN (SYSOSC enabled) (1)			8.8		
	Wakeup time from STOP2 to RUN (SYSOSC disabled) (1)			8.8		
$t_{WAKE, STANDBY}$	Wakeup time from STANDBY0 to RUN (1)			9.9		us
	Wakeup time from STANDBY1 to RUN (1)			9.9		
$t_{WAKEUP, SHDN}$	Wakeup time from SHUTDOWN to RUN (2)	Fast boot enabled		270		us
		Fast boot disabled		290		
Asynchronous Fast Clock Request Timing						
$t_{DELAY, SLEEP}$	Delay time from edge of asynchronous request to first 32MHz MCLK edge	Mode is SLEEP1		0.35		us
		Mode is SLEEP2		0.92		
$t_{DELAY, STOP}$	Delay time from edge of asynchronous request to first 32MHz MCLK edge	Mode is STOP0		0.1		us
		Mode is STOP1		2.2		
		Mode is STOP2		0.9		
$t_{DELAY, STANDBY}$	Delay time from edge of asynchronous request to first 32MHz MCLK edge	Mode is STANDBY0		3.1		us
		Mode is STANDBY1		3.1		
Startup Timing						
$t_{START, RESET}$	Device cold startup time from reset/ power-up (3)	Fast boot enabled		270		us
		Fast boot disabled		310		
NRST Timing						
$t_{RST, BOOTRST}$	Pulse length on NRST pin to generate BOOTRST	ULPCLK≥4MHz		1.5		us
		ULPCLK=32kHz		30		
$t_{RST, POR}$	Pulse length on NRST pin to generate POR			1		s

(1) The wake-up time is measured from the edge of an external wake-up signal (GPIO wake-up event) to the time that the first instruction of the user program is executed, with glitch filter disabled (FILTEREN=0x0) and fast wake enabled (FASTWAKEONLY=1) .
(2) The wake-up time is measured from the edge of an external wake-up signal (IOMUX wake-up event) to the time that first instruction of the user program is executed.
(3) The start-up time is measured from the time that VDD crosses VBOR0- (cold start-up) to the time that the first instruction of the user program is executed.

Copyright © 2025 Texas Instruments Incorporated

7.9 Clock Specifications

7.9.1 System Oscillator (SYSOSC)

over operating free-air temperature range (unless otherwise noted)

PARAMETER		TEST CONDITIONS	MIN	TYP	MAX	UNIT
f_{SYSOSC}	Factory trimmed SYSOSC frequency	SYSOSCCFG.FREQ=00 (BASE)		32		MHz
		SYSOSCCFG.FREQ=01		4		
	User trimmed SYSOSC frequency	SYSOSCCFG.FREQ=10, SYSOSCTRIMUSER.FREQ=10		24		
		SYSOSCCFG.FREQ=10, SYSOSCTRIMUSER.FREQ=01		16		
f_{SYSOSC}	SYSOSC frequency accuracy when frequency correction loop (FCL) is enabled and an ideal R_{OSC} resistor is assumed (1) (2)	SETUSEFCL=1, T_a = 25 ℃	-0.60		0.68	%
		SETUSEFCL=1, -40 ℃ ≤ T_a ≤ 85 ℃	-0.80		0.93	
		SETUSEFCL=1, -40 ℃ ≤ T_a ≤ 105 ℃	-0.80		1.1	
		SETUSEFCL=1, -40 ℃ ≤ T_a ≤ 125 ℃	-0.80		1.3	
f_{SYSOSC}	SYSOSC accuracy when frequency correction loop (FCL) is enabled with R_{OSC} resistor put at R_{OSC} pin, for factory trimmed frequencies(1)	SETUSEFCL=1, T_a = 25 ℃, ±0.1% ±25ppm R_{OSC}	-0.7		0.78	%
		SETUSEFCL=1, -40 ℃ ≤ T_a ≤ 85 ℃, ±0.1% ±25ppm R_{OSC}	-1.1		1.2	
		SETUSEFCL=1, -40 ℃ ≤ T_a ≤ 105 ℃, ±0.1% ±25ppm R_{OSC}	-1.1		1.4	
		SETUSEFCL=1, -40 ℃ ≤ T_a ≤ 125 ℃, ±0.1% ±25ppm R_{OSC}	-1.1		1.7	
f_{SYSOSC}	SYSOSC frequency accuracy when frequency correction loop (FCL) is enabled when the internal R_{OSC} resistor is used, 32MHz (4)	SETUSEFCL=1, T_a = 25 ℃	-1.2		1.3	%
		SETUSEFCL=1, -40 ℃ ≤ T_a ≤ 125 ℃	-2.1		1.6	
f_{SYSOSC}	SYSOSC frequency accuracy when frequency correction loop (FCL) is enabled when the internal R_{OSC} resistor is used, 4MHz (4)	SETUSEFCL=1, T_a = 25 ℃	-1.2		1.7	%
		SETUSEFCL=1, -40 ℃ ≤ T_a ≤ 125 ℃	-2.3		1.8	
f_{SYSOSC}	SYSOSC accuracy when frequency correction loop (FCL) is disabled, 32MHz	SETUSEFCL=0, SYSOSCCFG.FREQ=00, -40 ℃ ≤ T_a ≤ 125 ℃	-2.6		1.8	%
f_{SYSOSC}	SYSOSC accuracy when frequency correction loop (FCL) is disabled, for factory trimmed frequencies, 4MHz	SETUSEFCL=0, SYSOSCCFG.FREQ=01, -40 ℃ ≤ T_a ≤ 125 ℃	-2.8		2.1	%
R_{OSC}	External resistor between ROSC pin and VSS (1)	SETUSEFCL=1		100		kΩ
$t_{settle, SYSOSC}$	Settling time to target accuracy (3)	SETUSEFCL=1, ±0.1% 25ppm R_{OSC} (1)			30	us
$f_{settle, SYSOSC}$	f_{SYSOSC} additional undershoot accuracy during t_{settle} (3)	SETUSEFCL=1, ±0.1% 25ppm R_{OSC} (1)	-16			%

(1) The SYSOSC frequency correction loop (FCL) enables high SYSOSC accuracy via an external reference resistor (ROSC) which must be connected between the device ROSC pin and VSS when using the FCL. Accuracies are shown for a ±0.1% ±25ppm ROSC; relaxed tolerance resistors may also be used (with reduced SYSOSC accuracy). See the SYSOSC section of the technical reference manual for details on computing SYSOSC accuracy for various ROSC accuracies. ROSC does not need to be populated if the FCL is not enabled.

(2) Represents the device accuracy only. The tolerance and temperature drift of the ROSC resistor used must be combined with this spec to determine final accuracy. Performance for a ±0.1% ±25ppm ROSC is given as a reference point.

(3) When SYSOSC is waking up (for example, when exiting a low power mode) and FCL is enabled, the SYSOSC will initially undershoot the target frequency fSYSOSC by an additional error of up to fsettle,SYSOSC for the time tsettle,SYSOSC, after which the target accuracy is achieved.

(4) The SYSOSC frequency correction loop (FCL) enables high SYSOSC accuracy via an internal reference resistor when using the FCL. See the SYSOSC section of the technical reference manual for details on computing SYSOSC accuracy.

Copyright © 2025 Texas Instruments Incorporated

7.9.2 Low Frequency Oscillator (LFOSC)

over operating free-air temperature range (unless otherwise noted)

PARAMETER		TEST CONDITIONS	MIN	TYP	MAX	UNIT
f_{LFOSC}	LFOSC frequency			32768		Hz
	LFOSC accuracy	-40 °C ≤ T_a ≤ 125 °C	–5		5	%
		-40 °C ≤ T_a ≤ 85 °C	–3		3	%
I_{LFOSC}	LFOSC current consumption			300		nA
$t_{start, LFOSC}$	LFOSC start-up time			1		ms

7.9.3 Low Frequency Crystal/Clock

over operating free-air temperature range (unless otherwise noted)

PARAMETER		TEST CONDITIONS	MIN	TYP	MAX	UNIT
Low frequency crystal oscillator (LFXT)						
f_{LFXT}	LFXT frequency			32768		Hz
DC_{LFXT}	LFXT duty cycle		30		70	%
OA_{LFXT}	LFXT crystal oscillation allowance			419		kΩ
$C_{L, eff}$	Integrated effective load capacitance(1)			1		pF
$t_{start, LFXT}$	LFXT start-up time			1000		ms
I_{LFXT}	LFXT current consumption	XT1DRIVE=0, LOWCAP=1		200		nA
Low frequency digital clock input (LFCLK_IN)						
f_{LFIN}	LFCLK_IN frequency (2)	SETUSEEXLF=1	29491	32768	36045	Hz
DC_{LFIN}	LFCLK_IN duty cycle (2)	SETUSEEXLF=1	40		60	%
LFCLK Monitor						
$f_{FAULTLF}$	LFCLK monitor fault frequency (3)	MONITOR=1	2800	4200	8400	Hz

(1) This includes parasitic bond and package capacitance (≈2pF per pin), calculated as $C_{LFXIN} \times C_{LFXOUT}/(C_{LFXIN}+C_{LFXOUT})$, where C_{LFXIN} and C_{LFXOUT} are the total capacitance at LFXIN and LFXOUT, respectively.
(2) The digital clock input (LFCLK_IN) accepts a logic level square wave clock.
(3) The LFCLK monitor may be used to monitor the LFXT or LFCLK_IN. It will always fault below the MIN fault frequency, and will never fault above the MAX fault frequency.

7.10 Digital IO

7.10.1 Electrical Characteristics

over recommended ranges of supply voltage and operating free-air temperature (unless otherwise noted)

PARAMETER		TEST CONDITIONS		MIN	TYP	MAX	UNIT
V_{IH}	High level input voltage	ODIO (1)	VDD≥1.62V	0.7*VDD		5.5	V
			VDD≥2.7V	2		5.5	V
		All I/O except ODIO & Reset	VDD≥1.62V	0.7*VDD		VDD+0.3	V
V_{IL}	Low level input voltage	ODIO	VDD≥1.62V	-0.3		0.3*VDD	V
			VDD≥2.7V	-0.3		0.8	V
		All I/O except ODIO & Reset	VDD≥1.62V	-0.3		0.3*VDD	V
V_{HYS}	Hysteresis	ODIO		0.05*VDD			V
		All I/O except ODIO		0.1*VDD			V
I_{lkg}	High-Z leakage current (All packages)	SDIO (except PB24) (2) (3)	1.62V ≤ VDD ≤ 3.6V, -40 °C ≤ T_a ≤ 125 °C			50(4)	nA
		PB24(2) (3)	1.62V ≤ VDD ≤ 3.6V, -40 °C ≤ T_a ≤ 125 °C			130(4)	nA

Copyright © 2025 Texas Instruments Incorporated

over recommended ranges of supply voltage and operating free-air temperature (unless otherwise noted)

PARAMETER		TEST CONDITIONS		MIN	TYP	MAX	UNIT
R_{PU}	Pull up resistance	All I/O except ODIO	VIN = VSS		40		kΩ
R_{PD}	Pull down resistance		VIN = VDD		40		kΩ
C_I	Input capacitance		VDD = 3.3V		5		pF
V_{OH}	High level output voltage	SDIO	VDD≥2.7V, $\|I_{IO}\|_{,max}$=6mA VDD≥1.71V, $\|I_{IO}\|_{,max}$=2mA VDD≥1.62V, $\|I_{IO}\|_{,max}$=1.5mA -40 °C ≤ T_a ≤ 25 °C	VDD-0.4			V
			VDD≥2.7V, $\|I_{IO}\|_{,max}$=6mA VDD≥1.71V, $\|I_{IO}\|_{,max}$=2mA VDD≥1.62V, $\|I_{IO}\|_{,max}$=1.5mA -40 °C ≤ T_a ≤ 125 °C	VDD-0.45			
		HSIO	VDD≥2.7V, DRV=1, $\|I_{IO}\|_{,max}$=6mA VDD≥1.71V, DRV=1, $\|I_{IO}\|_{,max}$=3mA VDD≥1.62V, DRV=1, $\|I_{IO}\|_{,max}$=2mA -40 °C ≤ T_a ≤ 25 °C	VDD-0.4			
			VDD≥2.7V, DRV=1, $\|I_{IO}\|_{,max}$=6mA VDD≥1.71V, DRV=1, $\|I_{IO}\|_{,max}$=3mA VDD≥1.62V, DRV=1, $\|I_{IO}\|_{,max}$=2mA -40 °C ≤ T_a ≤ 125 °C	VDD-0.45			
			VDD≥2.7V, DRV=0, $\|I_{IO}\|_{,max}$=4mA VDD≥1.71V, DRV=0, $\|I_{IO}\|_{,max}$=2mA VDD≥1.62V, DRV=0, $\|I_{IO}\|_{,max}$=1.5mA -40 °C ≤ T_a ≤ 25 °C	VDD-0.4			
			VDD≥2.7V, DRV=0, $\|I_{IO}\|_{,max}$=4mA VDD≥1.71V, DRV=0, $\|I_{IO}\|_{,max}$=2mA VDD≥1.62V, DRV=0, $\|I_{IO}\|_{,max}$=1.5mA -40 °C ≤ T_a ≤ 125 °C	VDD-0.45			
		HDIO	VDD≥2.7V, DRV=1[(5)], $\|I_{IO}\|_{,max}$=20mA VDD≥1.71V, DRV=1[(5)], $\|I_{IO}\|_{,max}$=10mA	VDD-0.4			
			VDD≥2.7V, DRV=0, $\|I_{IO}\|_{,max}$=6mA VDD≥1.71V, DRV=0, $\|I_{IO}\|_{,max}$=2mA	VDD-0.4			

Copyright © 2025 Texas Instruments Incorporated

over recommended ranges of supply voltage and operating free-air temperature (unless otherwise noted)

PARAMETER		TEST CONDITIONS		MIN	TYP	MAX	UNIT
V_{OL}	Low level output voltage	SDIO	VDD≥2.7V, $\|I_{IO}\|_{,max}$=6mA VDD≥1.71V, $\|I_{IO}\|_{,max}$=2mA VDD≥1.62V, $\|I_{IO}\|_{,max}$=1.5mA -40 °C ≤ T_a ≤ 25 °C			0.4	V
			VDD≥2.7V, $\|I_{IO}\|_{,max}$=6mA VDD≥1.71V, $\|I_{IO}\|_{,max}$=2mA VDD≥1.62V, $\|I_{IO}\|_{,max}$=1.5mA -40 °C ≤ T_a ≤ 125 °C			0.45	
		HSIO	VDD≥2.7V, DRV=1, $\|I_{IO}\|_{,max}$=6mA VDD≥1.71V, DRV=1, $\|I_{IO}\|_{,max}$=3mA VDD≥1.62V, DRV=1, $\|I_{IO}\|_{,max}$=2mA -40 °C ≤ T_a ≤ 25 °C			0.4	
			VDD≥2.7V, DRV=1, $\|I_{IO}\|_{,max}$=6mA VDD≥1.71V, DRV=1, $\|I_{IO}\|_{,max}$=3mA VDD≥1.62V, DRV=1, $\|I_{IO}\|_{,max}$=2mA -40 °C ≤ T_a ≤ 125 °C			0.45	
			VDD≥2.7V, DRV=0, $\|I_{IO}\|_{,max}$=4mA VDD≥1.71V, DRV=0, $\|I_{IO}\|_{,max}$=2mA VDD≥1.62V, DRV=0, $\|I_{IO}\|_{,max}$=1.5mA -40 °C ≤ T_a ≤ 25 °C			0.4	
			VDD≥2.7V, DRV=0, $\|I_{IO}\|_{,max}$=4mA VDD≥1.71V, DRV=0, $\|I_{IO}\|_{,max}$=2mA VDD≥1.62V, DRV=0, $\|I_{IO}\|_{,max}$=1.5mA -40 °C ≤ T_a ≤ 125 °C			0.45	
		HDIO	VDD≥2.7V, DRV=1(5), $\|I_{IO}\|_{,max}$=20mA VDD≥1.71V, DRV=1(5), $\|I_{IO}\|_{,max}$=10mA			0.4	
			VDD≥2.7V, DRV=0, $\|I_{IO}\|_{,max}$=6mA VDD≥1.71V, DRV=0, $\|I_{IO}\|_{,max}$=2mA			0.4	
		ODIO	VDD≥2.7V, $I_{OL,max}$=8mA VDD≥1.71V, $I_{OL,max}$=4mA -40 °C ≤ T_a ≤ 25 °C			0.4	
			VDD≥2.7V, $I_{OL,max}$=8mA VDD≥1.71V, $I_{OL,max}$=4mA -40 °C ≤ T_a ≤ 125 °C			0.45	

(1) I/O Types: ODIO = 5V Tolerant Open-Drain , SDIO = Standard-Drive , HSIO = High-Speed
(2) The leakage current is measured with VSS or VDD applied to the corresponding pin(s), unless otherwise noted.
(3) The leakage of the digital port pins is measured individually. The port pin is selected for input and the pullup/pulldown resistor is disabled.
(4) This value is for SDIO not muxed with any analog inputs. If the SDIO is muxed with analog inputs then the leakage can be higher.
(5) When operating a HDIO in DRV=1 high drive strength configuration, a series resistor is necessary to limit the signal slew rate

Copyright © 2025 Texas Instruments Incorporated

7.10.2 Switching Characteristics

over recommended ranges of supply voltage and operating free-air temperature (unless otherwise noted)

PARAMETER		TEST CONDITIONS		MIN	TYP	MAX	UNIT
f_{max}	Port output frequency(1)	SDIO	VDD ≥ 2.7V, CL= 20pF			32	MHz
			VDD ≥ 1.71V, C_L= 20pF			16	MHz
		HSIO	VDD ≥ 2.7V, DRV = 1, CL= 20pF			32	MHz
			VDD ≥ 2.7V, DRV = 0, CL= 20pF			32	MHz
			VDD ≥ 1.71V, DRV = 1, CL= 20pF			24	MHz
			VDD ≥ 1.71V, DRV = 0, CL= 20pF			16	MHz
		HDIO	VDD ≥ 2.7V, DRV = 1(2), CL= 20pF			20	MHz
			VDD ≥ 2.7V, DRV = 0, CL= 20pF			20	MHz
			VDD ≥ 1.71V, DRV = 1(2), CL= 20pF			16	MHz
			VDD ≥ 1.71V, DRV = 0, CL= 20pF			16	MHz
		ODIO	VDD ≥ 1.71V, FM+, CL= 20pF - 100pF			1	MHz
t_r,t_f	Output rise/fall time	SDIO	VDD ≥ 2.7V, CL= 20pF			3.5	ns
			VDD ≥ 1.71V, C_L= 20pF			6.6	ns
		HSIO	VDD ≥ 2.7V, DRV = 1, CL= 20pF			1.8	ns
			VDD ≥ 2.7V, DRV = 0, CL= 20pF			5.9	ns
			VDD ≥ 1.71V, DRV = 1, CL= 20pF			3.7	ns
			VDD ≥ 1.71V, DRV = 0, CL= 20pF			12.6	ns
		HDIO	VDD ≥ 2.7V, DRV = 1, CL= 20pF			1.7	ns
			VDD ≥ 2.7V, DRV = 0, CL= 20pF			3.8	ns
			VDD ≥ 1.71V, DRV = 1, CL= 20pF			3.1	ns
			VDD ≥ 1.71V, DRV = 0, CL= 20pF			8.2	ns
t_f	Output fall time	ODIO	VDD ≥ 1.71V, FM+, CL= 20pF-100pF	20*VDD/5.5		120	ns

(1) I/O Types: ODIO = 5V Tolerant Open-Drain , SDIO = Standard-Drive , HSIO = High-Speed , HDIO = High-Drive
(2) When operating a HDIO in DRV=1 high drive strength configuration, a series resistor is necessary to limit the signal slew rate

7.11 Analog Mux VBOOST

over operating free-air temperature range (unless otherwise noted)

PARAMETER		TEST CONDITIONS	MIN	TYP	MAX	UNIT
I_{VBST}	VBOOST current adder	MCLK/ULPCLK is LFCLK		0.8		uA
		MCLK/ULPCLK is not LFCLK, SYSOSC frequency is 4MHz		10.6		
$t_{START,VBST}$	VBOOST startup time			12	20	us

7.12 ADC

7.12.1 Electrical Characteristics

over recommended ranges of supply voltage and operating free-air temperature (unless otherwise noted), all TYP values are measured at 25°C and all accuracy parameters are measured using 12-bit resolution mode (unless otherwise noted)

PARAMETER		TEST CONDITIONS	MIN	TYP	MAX	UNIT
$Vin_{(ADC)}$	Analog input voltage range(1)	Applies to all ADC analog input pins	0		VDD	V
V_{R+}	Positive ADC reference voltage	V_{R+} sourced from VDD		VDD		V
		V_{R+} sourced from external reference pin (VREF+)	1.4		VDD	V
		V_{R+} sourced from internal reference (VREF)		VREF		V
V_{R-}	Negative ADC reference voltage			0		V

Copyright © 2025 Texas Instruments Incorporated

over recommended ranges of supply voltage and operating free-air temperature (unless otherwise noted), all TYP values are measured at 25°C and all accuracy parameters are measured using 12-bit resolution mode (unless otherwise noted)

PARAMETER		TEST CONDITIONS	MIN	TYP	MAX	UNIT
F_S	ADC sampling frequency	RES = 0x0 (12-bit mode), External Reference			1.68	Msps
F_S	ADC sampling frequency	External reference (3), HW Averaging Enabled, 16 Samples and 2bit shift		105		Ksps
F_S	ADC sampling frequency	RES = 0x0 (12-bit mode), Internal Reference			200	ksps
$I_{(ADC)}$ (2)	Operating supply current into VDD terminal	F_S = 1.68MSPS, Internal reference OFF, V_{R+} = VDD		570		µA
		F_S = 200ksps, Internal reference ON, V_{R+} = VREF = 2.5V		320		
$C_{S/H}$	ADC sample-and-hold capacitance			4.3		pF
Rin	ADC input resistance			0.5		kΩ
ENOB	Effective number of bits	Fin = 10kHz, External reference (3)	11.0	11.1		bit
		Fin = 5kHz, External reference (3), HW Averaging Enabled, 16 Samples and 2bit shift		12.3		
		Fin = 10kHz, Internal reference, V_{R+} = VREF = 2.5V	10	10.2		
SNR	Signal-to-noise ratio	Fin = 10kHz, External reference (3)		71		dB
		Fin = 5kHz, External reference (3), HW Averaging Enabled, 16 Samples and 2bit shift		76		
		Fin = 10kHz, Internal reference, V_{R+} = VREF = 2.5V		65		
$PSRR_{DC}$	Power supply rejection ratio, DC	External reference (3), VDD = $VDD_{(min)}$ to $VDD_{(max)}$		68		dB
		VDD = $VDD_{(min)}$ to $VDD_{(max)}$ Internal reference, V_{R+} = VREF = 2.5V		60		
$PSRR_{AC}$	Power supply rejection ratio, AC	External reference (3), ΔVDD = 0.1 V at 1 kHz		61		dB
		ΔVDD = 0.1 V at 1 kHz Internal reference, V_{R+} = VREF = 2.5V		55		
T_{wakeup}	ADC Wakeup Time	Assumes internal reference is active			5	us
$V_{SupplyMon}$	Supply Monitor voltage divider (VDD/3) accuracy	ADC input channel: Supply Monitor (4)	-1.5		+1.5	%
$I_{SupplyMon}$	Supply Monitor voltage divider current consumption	ADC input channel: Supply Monitor		10		uA

(1) The analog input voltage range must be within the selected ADC reference voltage range V_{R+} to $V_{R–}$ for valid conversion results.
(2) The internal reference (VREF) supply current is not included in current consumption parameter $I_{(ADC)}$.
(3) All external reference specifications are measured with V_{R+} = VREF+ = VDD = 3.3V and V_{R-} = VREF- = VSS = 0V and external 1uF cap on VREF+ pin.
(4) Analog power supply monitor. Analog input on channel 31 for VDD monitor is disconnected and is internally connected to the voltage divider which is VDD/3.

7.12.2 Switching Characteristics

over recommended ranges of supply voltage and operating free-air temperature (unless otherwise noted)

PARAMETER		TEST CONDITIONS	MIN	TYP	MAX	UNIT
f_{ADCCLK}	ADC clock frequency		4		32	MHz
$t_{ADC\ trigger}$	Software trigger minimum width		3			ADCCLK cycles
t_{Sample}	Sampling time	12-bit mode, R_S = 50Ω, C_{pext} = 10pF	156			ns
t_{Sample_VREF}	Sample time with VREF	ADC CHANNEL=28,12-bit mode,VDD as reference	4			µs
$t_{Sample_SupplyMon(VDD)}$	Sample time with Supply Monitor (VDD/3) (1)		5			µs

(1) Analog power supply monitor. Analog input on channel 31 for VDD monitor is disconnected and is internally connected to the voltage divider which is VDD/3.

Copyright © 2025 Texas Instruments Incorporated

7.12.3 Linearity Parameters

over recommended ranges of supply voltage and operating free-air temperature (unless otherwise noted), all TYP values are measured at 25°C and all linearity parameters are measured using 12-bit resolution mode (unless otherwise noted) (1)

PARAMETER		TEST CONDITIONS	MIN	TYP	MAX	UNIT
E_I	Integral linearity error (INL)	External reference (2)	-2		2	LSB
E_D	Differential linearity error (DNL) Guaranteed no missing codes	External reference (2)	-1		1	LSB
E_O	Offset error	External reference (2)	-3.5		3.5	mV
E_G	Gain error	External reference (2)	-4		4	LSB

(1) Total Unadjusted Error (TUE) can be calculated from E_I , E_O , and E_G using the following formula: TUE = $\sqrt{(E_I^2 + |E_O|^2 + E_G^2)}$
Note: You must convert all of the errors into the same unit, usually LSB, for the above equation to be accurate
(2) All external reference specifications are measured with V_{R+} = VREF+ = VDD and V_{R-} = VSS = 0V, external 1uF cap on VREF+ Pin

7.12.4 Typical Connection Diagram

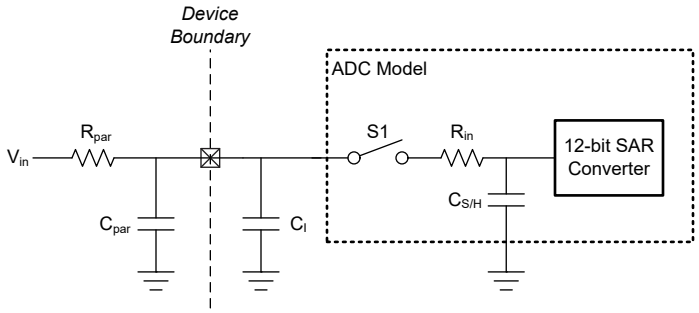

Figure 7-2. ADC Input Network

1. Refer to Electrical Characteristics for the values of R_{in} and $C_{S/H}$
2. Refer to Electrical Characteristics for the value of C_I
3. C_{par} and R_{par} represent the parasitic capacitance and resistance of the external ADC input circuitry

Use the following equations to solve for the minimum sampling time (T) required for an ADC conversion:

1. Tau = $(R_{par} + R_{in}) \times C_{S/H} + R_{par} \times (C_{par} + C_I)$
2. K= $\ln(2^n/\text{Settling error}) - \ln((C_{par} + C_I)/C_{S/H})$
3. T (Min sampling time) = K × Tau

7.13 Temperature Sensor

over operating free-air temperature range (unless otherwise noted)(1)

PARAMETER		TEST CONDITIONS	MIN	TYP	MAX	UNIT
TS_{TRIM}	Factory trim temperature (2)	ADC and VREF configuration: RES=0 (12-bit mode), VRSEL=2h (VREF=1.4V), ADC t_{Sample}=12.5µs	27	30	33	℃
TS_c	Temperature coefficient	-40℃ ≤ T_j ≤ 130℃	-2.05	-1.9	-1.75	mV/℃
$t_{SET, TS}$	Temperature sensor settling time (3)	ADC and VREF configuration: RES=0 (12-bit mode), VRSEL= 2h (VREF=1.4V), ADC CHANNEL=11			12.5	us

(1) Effective absolute temperature accuracy may be computed by combining the relative temperature accuracy together with the trim accuracy, and accounting for any analog to digital conversion error.
(2) Higher absolute accuracy may be achieved through user calibration. Please refer to temperature sensor chapter in detailed description section.
(3) This is the minimum required ADC sampling time when measuring the temperature sensor.

Copyright © 2025 Texas Instruments Incorporated

7.14 VREF

7.14.1 Voltage Characteristics

over recommended ranges of supply voltage and operating free-air temperature (unless otherwise noted)

PARAMETER		TEST CONDITIONS	MIN	TYP	MAX	UNIT
VDD_{min}	Minimum supply voltage needed for VREF operation	BUFCONFIG = 1	1.62			V
		BUFCONFIG = 0	2.7			
VREF	Voltage reference output voltage	BUFCONFIG = 1	1.38	1.4	1.42	V
		BUFCONFIG = 0	2.46	2.5	2.54	

7.14.2 Electrical Characteristics

over recommended ranges of supply voltage and operating free-air temperature (unless otherwise noted)

PARAMETER		TEST CONDITIONS	MIN	TYP	MAX	UNIT
I_{VREF}	VREF operating supply current	BUFCONFIG = {0, 1}, No load		80	100	µA
TC_{VREF}	Temperature coefficient of VREF (1)	BUFCONFIG = {0, 1}			80	ppm/°C
TC_{drift}	Long term VREF drift	Time = 1000 hours, BUFCONFIG = {0, 1}, T = 25°C			300	ppm
$PSRR_{DC}$	VREF Power supply rejection ratio, DC	VDD = 1.7 V to VDDmax, BUFCONFIG = 1		70		dB
		VDD = 2.7 V to VDDmax, BUFCONFIG = 0		60		
$T_{startup}$	VREF startup time	BUFCONFIG = {0, 1} , VDD ≥ 2.7 V			15	us

(1) The temperature coefficient of the VREF output is the sum of TC_{VRBUF} and the temperature coefficient of the internal bandgap reference.

7.15 I2C

7.15.1 I2C Characteristics

over operating free-air temperature range (unless otherwise noted)

PARAMETERS		TEST CONDITIONS	Standard mode		Fast mode		Fast mode plus		UNIT
			MIN	MAX	MIN	MAX	MIN	MAX	
f_{I2C}	I2C input clock frequency		2	32	8	32	20	32	MHz
f_{SCL}	SCL clock frequency		0.025	0.1		0.4		1	MHz
$t_{HD,STA}$	Hold time (repeated) START		4		0.6		0.26		us
t_{LOW}	LOW period of the SCL clock		4.7		1.3		0.5		us
t_{HIGH}	High period of the SCL clock		4		0.6		0.26		us
$t_{SU,STA}$	Setup time for a repeated START		4.7		0.6		0.26		us
$t_{HD,DAT}$	Data hold time		0		0		0		ns
$t_{SU,DAT}$	Data setup time		250		100		50		ns
$t_{SU,STO}$	Setup time for STOP		4		0.6		0.26		us
t_{BUF}	bus free time between a STOP and START condition		4.7		1.3		0.5		us
$t_{VD;DAT}$	data valid time			3.45		0.9		0.45	us
$t_{VD;ACK}$	data valid acknowledge time			3.45		0.9		0.45	us

Copyright © 2025 Texas Instruments Incorporated

7.15.2 I2C Filter

over operating free-air temperature range (unless otherwise noted)

PARAMETERS		TEST CONDITIONS	MIN	TYP	MAX	UNIT
f_{SP}	Pulse duration of spikes suppressed by input filter	AGFSELx = 0		6		ns
		AGFSELx = 1		14	35	
		AGFSELx = 2		22	60	
		AGFSELx = 3		35	90	

7.15.3 I²C Timing Diagram

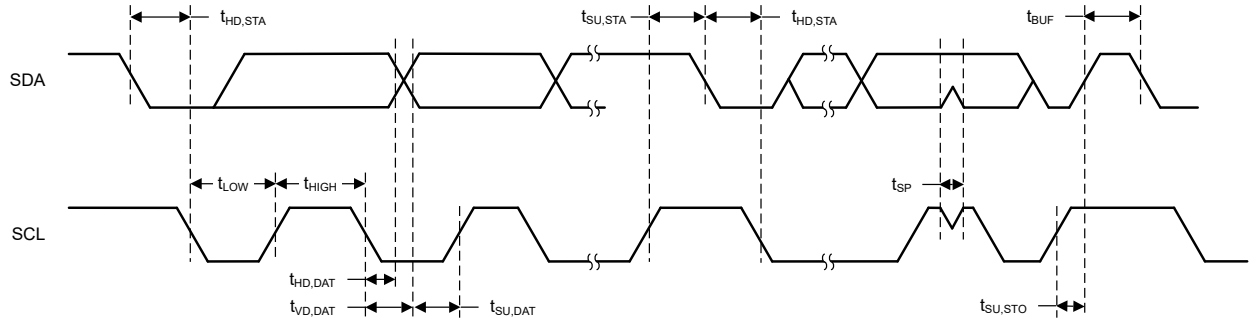

Figure 7-3. I2C Timing Diagram

7.16 SPI

7.16.1 SPI

over operating free-air temperature range (unless otherwise noted)

PARAMETERS		TEST CONDITIONS	MIN	TYP	MAX	UNIT
SPI						
f_{SPI}	SPI clock frequency	Clock max speed >= 32MHz 1.62 < VDD < 3.6V Peripheral or Controller mode			16[4]	MHz
DC_{SCK}	SCK Duty Cycle		40	50	60	%
Controller						
$t_{SCLK_H/L}$	SCLK High or Low time		(tSPI/2) - 1	tSPI / 2	(tSPI/2) + 1	ns
$t_{CS.LEAD}$	CS lead-time, CS active to clock	SPH=0	1 SPI Clock			ns
		SPH=1	1/2 SPI Clock			
$t_{CS.LAG}$	CS lag time, Last clock to CS inactive	SPH=0	1/2 SPI Clock			ns
		SPH=1	1 SPI Clock			
$t_{CS.ACC}$	CS access time, CS active to PICO data out				1/2 SPI Clock	ns
$t_{CS.DIS}$	CS disable time, CS inactive to PICO high impedance				1 SPI Clock	ns
$t_{SU.CI}$	POCI input data setup time [1]	2.7 < VDD < 3.6V, delayed sampling enabled	1			ns
		1.62 < VDD < 2.7V, delayed sampling enabled	2.5			
		2.7 < VDD < 3.6V, no delayed sampling	27			
		1.62 < VDD < 2.7V, no delayed sampling	34			

Copyright © 2025 Texas Instruments Incorporated

over operating free-air temperature range (unless otherwise noted)

PARAMETERS		TEST CONDITIONS	MIN	TYP	MAX	UNIT
$t_{HD.CI}$	POCI input data hold time	delayed sampling enabled	26			ns
		no delayed sampling	0			
$t_{VALID.CO}$	PICO output data valid time (2)				11.5	ns
$t_{HD.CO}$	PICO output data hold time (3)		0			ns
Peripheral						
$t_{CS.LEAD}$	CS lead-time, CS active to clock		13			ns
$t_{CS.LAG}$	CS lag time, Last clock to CS inactive		1			ns
$t_{CS.ACC}$	CS access time, CS active to POCI data out				34.5	ns
$t_{CS.DIS}$	CS disable time, CS inactive to POCI high impedance				34.5	ns
$t_{SU.PI}$	PICO input data setup time		16			ns
$t_{HD.PI}$	PICO input data hold time		3			ns
$t_{VALID.PO}$	POCI output data valid time(2)	2.7 < VDD < 3.6V			26	ns
		1.62 < VDD < 2.7V			32.5	
$t_{HD.PO}$	POCI output data hold time(3)		5			ns

(1) The POCI input data setup time can be fully compensated when delayed sampling feature is enabled.
(2) Specifies the time to drive the next valid data to the output after the output changing SCLK clock edge
(3) Specifies how long data on the output is valid after the output changing SCLK clock edge
(4) fSPIclk = 1/2tLO/HI with tLO/HI = max(tVALID,CO + tSU,PI, tSU,CI + tVALID,PO).

7.16.2 SPI Timing Diagram

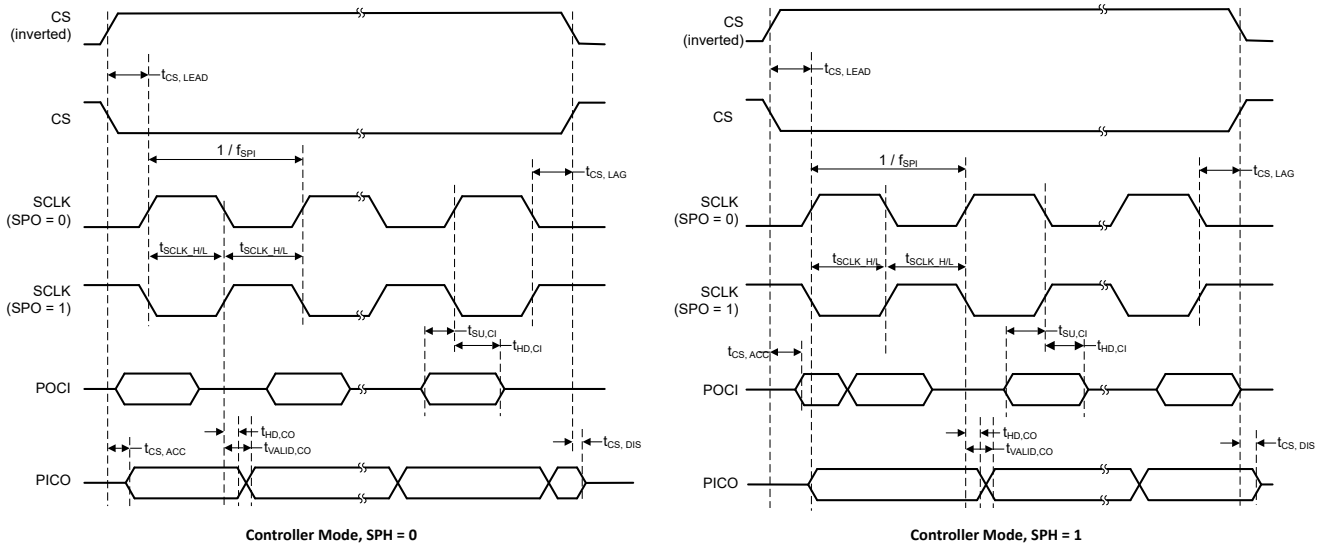

Figure 7-4. SPI Timing Diagram - Controller Mode

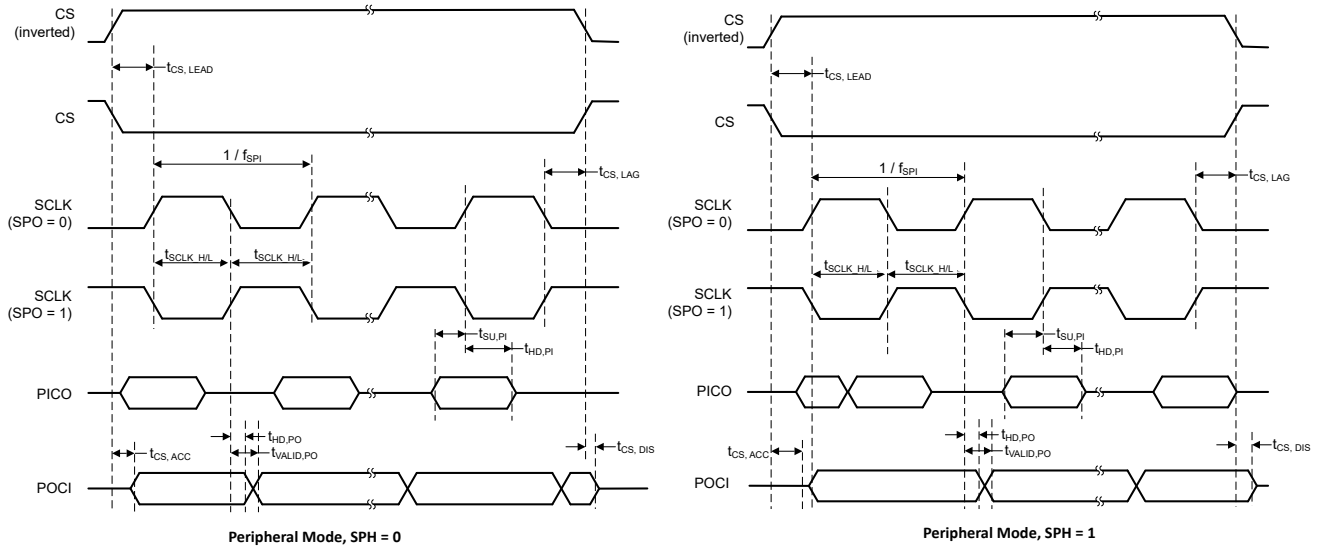

Figure 7-5. SPI Timing Diagram - Peripheral Mode

7.17 UART

over operating free-air temperature range (unless otherwise noted)

PARAMETERS		TEST CONDITIONS	MIN	TYP	MAX	UNIT
f_{UART}	UART input clock frequency				32	MHz
f_{BITCLK}	BITCLK clock frequency(equals baud rate in MBaud)				4	MHz
t_{SP}	Pulse duration of spikes suppressed by input filter(1)	AGFSELx = 0		6		ns
		AGFSELx = 1		14	35	
		AGFSELx = 2		22	60	
		AGFSELx = 3		35	90	

(1) Pulses on the UART receive input (RX) that are shorter than the UART receive deglitch time are suppressed. Thus the selected deglitch time can limit the maximum useable baud rate. To ensure that pulses are correctly recognized, their duration should exceed the maximum specification of the deglitch time.

7.18 TIMx

over operating free-air temperature range (unless otherwise noted)

PARAMETERS		TEST CONDITIONS	MIN	TYP	MAX	UNIT
t_{res}	Timer resolution time	$f_{TIMxCLK}$ = 32MHz	31.25			ns
			1			$t_{TIMxCLK}$

7.19 TRNG Electrical Characteristics

over operating free-air temperature range (unless otherwise noted)

PARAMETER		TEST CONDITIONS	MIN	TYP	MAX	UNIT
$TRNG_{IACT}$	TRNG active current	TRNG clock = 20MHz		115		µA

7.20 TRNG Switching Characteristics

over operating free-air temperature range (unless otherwise noted)

PARAMETER		TEST CONDITIONS	MIN	TYP	MAX	UNIT
$TRNGCLK_F$	TRNG input clock frequency		9.5	10	25	MHz
$TRNG_{STARTUP}$	TRNG startup time			520		µs

Copyright © 2025 Texas Instruments Incorporated

over operating free-air temperature range (unless otherwise noted)

PARAMETER		TEST CONDITIONS	MIN	TYP	MAX	UNIT
$TRNG_{LAT32}$	Latency to generate 32 random bits	Decimation ratio = 4, TRNG clock = 20MHz		6.4		µs
$TRNG_{LAT256}$	Latency to generate 256 random bits	Decimation ratio = 4, TRNG clock = 20MHz		51.2		µs

7.21 Emulation and Debug

7.21.1 SWD Timing

over operating free-air temperature range (unless otherwise noted)

PARAMETER		TEST CONDITIONS	MIN	TYP	MAX	UNIT
f_{SWD}	SWD frequency				10	MHz

8 Detailed Description

The following sections describe all of the components that make up the devices in this data sheet. The peripherals integrated into these devices are configured by software through Memory Mapped Registers (MMRs). For more details, see the corresponding chapter of the *MSPM0 L-Series 32MHz Microcontrollers Technical Reference Manual*.

8.1 Functional Block Diagram

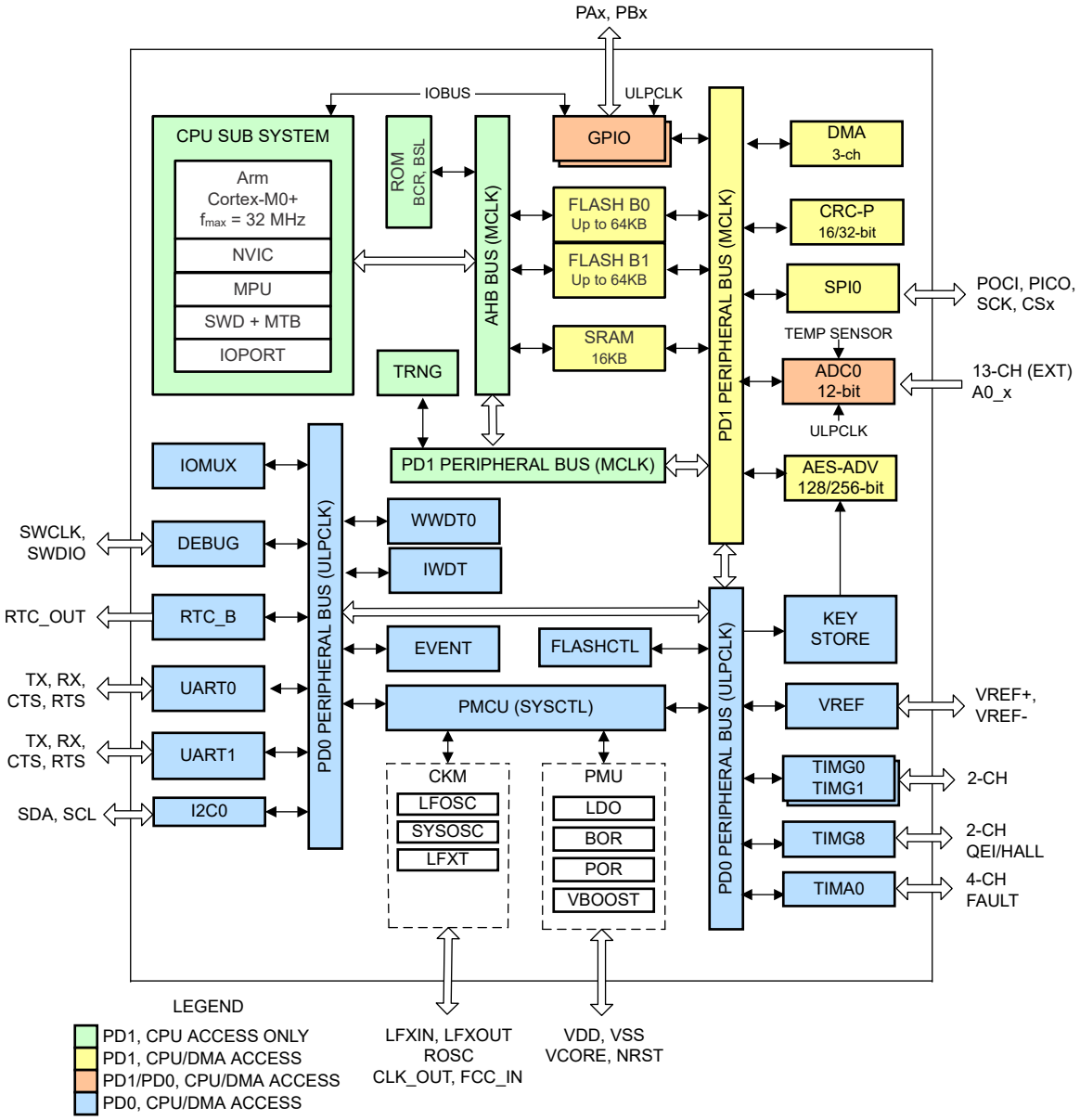

Figure 8-1. MSPM0L111x Functional Block Diagram

8.2 CPU

The CPU subsystem (MCPUSS) implements an Arm Cortex-M0+ CPU, an instruction prefetch and cache, a system timer, a memory protection unit, and interrupt management features. The Arm Cortex-M0+ is a cost-optimized 32-bit CPU that delivers high performance and low power to embedded applications. Key features of the CPU Sub System include:

Copyright © 2025 Texas Instruments Incorporated

- Arm Cortex-M0+ CPU supports clock frequencies from 32kHz to 32MHz
  - ARMv6-M Thumb instruction set (little endian) with single-cycle 32×32 multiply instruction
  - Single-cycle access to GPIO registers through Arm single-cycle IO port
- Prefetch logic to improve sequential code execution, and I-cache with 2 64-bit cache lines
- System timer (SysTick) with 24-bit down counter and automatic reload
- Memory protection unit (MPU) with 8 programmable regions
- Nested vectored interrupt controller (NVIC) with 4 programmable priority levels and tail chaining
- Interrupt groups for expanding the total interrupt sources, with jump index for low interrupt latency

8.3 Operating Modes

MSPM0 MCUs provide five main operating modes (power modes) to allow for optimization of the device power consumption based on application requirements. In order of decreasing power, the modes are: RUN, SLEEP, STOP, STANDBY, and SHUTDOWN. The CPU is active executing code in RUN mode. Peripheral interrupt events can wake the device from SLEEP, STOP, or STANDBY mode to the RUN mode. SHUTDOWN mode completely disables the internal core regulator to minimize power consumption, and wake is only possible via NRST, SWD, or a logic level match on certain IOs. RUN, SLEEP, STOP, and STANDBY modes also include several configurable policy options (e,g, RUN.x) for balancing performance with power consumption.

To further balance performance and power consumption, MSPM0 devices implement two power domains: PD1 (for the CPU, memories, and high performance peripherals), and PD0 (for low speed, low power peripherals). PD1 is always powered in RUN and SLEEP modes, but is disabled in all other modes. PD0 is always powered in RUN, SLEEP, STOP, and STANDBY modes. PD1 and PD0 are both disabled in SHUTDOWN mode.

8.3.1 Functionality by Operating Mode

Supported functionality in each operating mode is given in Table 8-1.

Functional key:

- **EN**: The function is enabled in the specified mode.
- **DIS**: The function is disabled (either clock or power gated) in the specified mode, but the function's configuration is retained.
- **OPT**: The function is optional in the specified mode, and remains enabled if configured to be enabled.
- **NS**: The function is not automatically disabled in the specified mode, but its use is not supported.
- **OFF**: The function is fully powered off in the specified mode, and no configuration information is retained. When waking up from an OFF state, all module registers must be re-configured to the desired settings by application software.

Table 8-1. Supported Functionality by Operating Mode

OPERATING MODE		RUN			SLEEP			STOP			STANDBY		SHUTDOWN
		RUN0	RUN1	RUN2	SLEEP0	SLEEP1	SLEEP2	STOP0	STOP1	STOP2	STANDBY0	STANDBY1	
Oscillators	SYSOSC	EN		DIS	EN		DIS	OPT[1]	EN	DIS	DIS		OFF
	LFOSC or LFXT	EN (LFOSC or LFXT)											OFF

Table 8-1. Supported Functionality by Operating Mode (continued)

OPERATING MODE		RUN			SLEEP			STOP			STANDBY		SHUTDOWN
		RUN0	RUN1	RUN2	SLEEP0	SLEEP1	SLEEP2	STOP0	STOP1	STOP2	STANDBY0	STANDBY1	
Clocks	CPUCLK	32MHz	32kHz		DIS								OFF
	MCLK to PD1	32MHz	32kHz		32MHz	32kHz		DIS					OFF
	ULPCLK to PD0	32MHz	32kHz		32MHz	32kHz		4MHz(1)	4MHz	32kHz	32kHz	DIS	OFF
	ULPCLK to TIMG0/8	32MHz	32kHz		32MHz	32kHz		4MHz(1)	4MHz	32kHz	32kHz	32kHz(2)	OFF
	MFCLK	OPT	DIS		OPT	DIS		OPT		DIS	DIS		OFF
	LFCLK to PD0/1	32kHz										DIS	OFF
	LFCLK to TIMG0/8	32kHz										32kHz(2)	OFF
	LFCLK Monitor	OPT											OFF
	MCLK Monitor	OPT										DIS	OFF
PMU	POR monitor	EN											
	BOR monitor	EN											OFF
	Core regulator	FULL DRIVE						REDUCED DRIVE			LOW DRIVE		OFF
Core Functions	CPU	EN			DIS								OFF
	DMA	OPT						DIS (triggers supported)					OFF
	Flash	EN						DIS					OFF
	SRAM	EN						DIS					OFF
PD1 Peripherals	SPI0	OPT						DIS					OFF
	AESADV	OPT						OFF					OFF
	CRC-P	OPT						DIS					OFF
	TRNG	OPT						OFF					OFF
PD0 Peripherals	GPIOA/B(3)	OPT										OPT(2)	OFF
	UART0/1	OPT										OPT(2)	OFF
	I2C0	OPT										OPT(2)	OFF
	TIMG0/1/8	OPT										OPT(2)	OFF
	TIMA0	OPT									DIS		OFF
	WWDT0	OPT										DIS	OFF
	IWDT	OPT											OFF
	RTC_B	OPT											OFF
	Keystore	OPT											OFF
Analog	VREF	OPT									OFF		OFF
	ADC0 (3)	OPT								NS (triggers supported)			OFF
	Temperature Sensor	OPT									OFF		OFF
IOMUX and IO Wakeup		EN											DIS w/ WAKE
Wake Sources		N/A			ANY IRQ			PD0 IRQ					IOMUX, NRST, SWD

(1) If STOP0 is entered from RUN1 (SYSOSC enabled but MCLK sourced from LFCLK), SYSOSC remains enabled as in RUN1 and ULPCLK remains at 32kHz as in RUN1. If STOP0 is entered from RUN2 (SYSOSC was disabled and MCLK was sourced from LFCLK), SYSOSC remains disabled as in RUN2 and ULPCLK remains at 32kHz as in RUN2.

(2) When using the STANDBY1 policy for STANDBY, only specific peripherals (TIMG0, TIMG8, and RTC) are clocked. Other PD0 peripherals can generate an asynchronous fast clock request upon external activity but are not actively clocked.

(3) For ADCx and GPIO Ports A and B, the digital logic is in PD0 and the register interface is in PD1. These peripherals support fast single-cycle register access when PD1 is active and also support basic operation down to STANDBY mode where PD0 is still active.

Copyright © 2025 Texas Instruments Incorporated

8.4 Power Management Unit (PMU)

The power management unit (PMU) generates the internally regulated core supplies for the device and provides supervision of the external supply (VDD). The PMU also contains the bandgap voltage reference used by the PMU itself as well as analog peripherals. Key features of the PMU include:

- Power-on reset (POR) supply monitor
- Brownout reset (BOR) supply monitor with early warning capability using three programmable thresholds
- Core regulator with support for RUN, SLEEP, STOP, and STANDBY operating modes to dynamically balance performance with power consumption
- Parity-protected trim to immediately generate a power-on reset (POR) in the event that a power management trim is corrupted

For more details, see the PMU chapter of the *MSPM0 L-Series 32MHz Microcontrollers Technical Reference Manual*.

8.5 Clock Module (CKM)

The clock module provides the following oscillators:

- **LFOSC**: Internal low-frequency oscillator (32kHz)
- **SYSOSC**: Internal high-frequency oscillator (4MHz or 32MHz with factory trim, 16MHz or 24MHz with user trim)
- **LFXT/LFCKIN** : low-frequency external crystal oscillator or digital clock input (32kHz)

The following clocks are distributed by the clock module for use by the processor, bus, and peripherals:

- **MCLK**: Main system clock for PD1 peripherals, derived from SYSOSC or LFCLK, active in RUN and SLEEP modes
- **CPUCLK**: Clock for the processor (derived from MCLK), active in RUN mode
- **ULPCLK**: Ultra-low power clock for PD0 peripherals, active in RUN, SLEEP, STOP, and STANDBY modes
- **MFCLK**: 4MHz fixed mid-frequency clock for peripherals, available in RUN, SLEEP, and STOP modes
- **LFCLK**: 32kHz fixed low-frequency clock for peripherals or MCLK, active in RUN, SLEEP, STOP, and STANDBY modes
- **ADCCLK**: ADC clock, available in RUN, SLEEP and STOP modes
- **CLK_OUT**: Used to output a clock externally, available in RUN, SLEEP, STOP, and STANDBY modes
- **HFCLK**: High frequency clock derived from HFCLK_IN, available in RUN and SLEEP mode

For more details, see the CKM chapter of the *MSPM0 L-Series 32MHz Microcontrollers Technical Reference Manual*.

8.6 DMA

The direct memory access (DMA) controller allows movement of data from one memory address to another without CPU intervention. For example, the DMA can be used to move data from ADC conversion memory to SRAM. The DMA reduces system power consumption by allowing the CPU to remain in low power mode, without having to awaken to move data to or from a peripheral.

The DMA in these devices support the following key features:

- 3 independent DMA transfer channels
  - 1 full-feature channel (DMA0), supporting repeated transfer modes
  - 2 basic channels (DMA1, DMA2), supporting single transfer modes
- Configurable DMA channel priorities
- Byte (8-bit), short word (16-bit), word (32-bit) and long word (64-bit) and long-long word (128-bit) or mixed byte and word transfer capability
- Transfer counter block size supports up to 64k transfers of any data type
- Configurable DMA transfer trigger selection
- Active channel interruption to service other channels
- Early interrupt generation for ping-pong buffer architecture

Copyright © 2025 Texas Instruments Incorporated

- Cascading channels upon completion of activity on another channel
- Stride mode to support data re-organization, such as 3-phase metering applications
- Gather mode

Table 8-2. DMA Features

Feature	FULL	BASIC
Channel#	0	1,2
Repeat Mode	Yes	-
Table & Fill Mode	Yes	-
Gather Mode	Yes	-
Pre-IRQ	Yes	-
Auto Enable	Yes	Yes
Long Long (128-bit) Transfer	Yes	Yes
Stride Mode	Yes	Yes
Cascading Channel Support	Yes	Yes

Table 8-3 lists the available triggers for the DMA which are configured using the DMATCTL.DMATSEL control bits in the DMA memory mapped registers.

Table 8-3. DMA Trigger Mapping

DMACTL.DMATSEL	Trigger Source
0	Software
1	Generic Subscriber 0 (FSUB_0)
2	Generic Subscriber 0 (FSUB_1)
3	AES Publisher 1
4	AES Publisher 2
5	ADC0 Publisher 1
6	I2C0 Publisher 1
7	I2C0 Publisher 2
8	SPI0 Publisher 1
9	SPI0 Publisher 2
10	UART0 Publisher 1
11	UART0 Publisher 2
12	UART1 Publisher 1
13	UART1 Publisher 2

For more details, see the DMA chapter of the *MSPM0 L-Series 32MHz Microcontrollers Technical Reference Manual*.

8.7 Events

The event manager transfers digital events from one entity (for example, a peripheral) to another (for example, a second peripheral, the DMA or the CPU). The event manager implements event transfer through a defined set of event publishers (generators) and subscribers (receivers) that are interconnected through an event fabric containing a combination of static and programmable routes.

Events that are transferred by the event manager include:

- Peripheral event transferred to the CPU as an interrupt request (IRQ) (Static Event)
  - Example: GPIO interrupt is sent to the CPU
- Peripheral event transferred to the DMA as a DMA trigger (DMA Event)

Copyright © 2025 Texas Instruments Incorporated

  - Example: UART data receive trigger to DMA to request a DMA transfer
- Peripheral event transferred to another peripheral to directly trigger an action in hardware (Generic Event)
  - Example: TIMx timer peripheral publishes a periodic event to the ADC subscriber port, and the ADC uses the event to trigger start-of-sampling

For more details, see the Events chapter of the *MSPM0 L-Series 32MHz Microcontrollers Technical Reference Manual*.

Table 8-4. Generic Event Channels

A generic route is either a point-to-point (1:1) route or a point-to-two (1:2) splitter route in which the peripheral publishing the event is configured to use one of several available generic route channels to publish the event to another entity (or entities, in the case of a splitter route). An entity can be another peripheral, a generic DMA trigger event, or a generic CPU event.

CHANID	Generic Route Channel Selection	Channel Type
0	No generic event channel selected	N/A
1	Generic event channel 1 selected	1 : 1
2	Generic event channel 2 selected	1 : 1
3	Generic event channel 3 selected	1 : 2 (splitter)

8.8 Memory

8.8.1 Memory Organization

Table 8-5 summarizes the memory map of the devices. For more information about the memory region detail, see the *Platform Memory Map* section in the *MSPM0 L-Series 32-MHz Microcontrollers Technical Reference Manual* .

Table 8-5. Memory Organization

MEMORY REGION	SUBREGION	MSPM0L1116	MSPM0L1117
Code (Flash Bank 0)	MAIN ECC Corrected	32KB 0x0000.0000 to 0x0000.7FFF	64KB 0x0000.0000 to 0x0000.FFFF
	MAIN ECC Uncorrected	0x0040.0000 to 0x0040.7FFF	0x0040.0000 to 0x0040.FFFF
	Flash ECC Code	0x0080.0000 to 0x0080.7FFF	0x0080.0000 to 0x0080.FFFF
Code (Flash Bank 1)	MAIN ECC Corrected	32KB 0x0001.0000 to 0x0001.7FFF	64KB 0x0001.0000 to 0x0001.FFFF
	MAIN ECC Uncorrected	0x0041.0000 to 0x0041.7FFF	0x0041.0000 to 0x0041.FFFF
	Flash ECC Code	0x0081.0000 to 0x0081.7FFF	0x0081.0000 to 0x0081.FFFF
SRAM (SRAM)	Default	16KB 0x2000.0000 to 0x2000.3FFF	16KB 0x2000.0000 to 0x2000.3FFF
Peripheral	Peripherals	0x4000.4000 to 0x4086.1FFF	0x4000.4000 to 0x4086.1FFF
	NONMAIN Corrected	2KB 0x41C0.0000 to 0x41C0.07FF	2KB 0x41C0.0000 to 0x41C0.07FF
	NONMAIN Uncorrected	0x41C1.0000 to 0x41C1.07FF	0x41C1.0000 to 0x41C1.07FF
	NONMAIN ECC code	0x41C2.0000 to 0x41C2.07FF	0x41C2.0000 to 0x41C2.07FF
	FACTORY Corrected	0x41C4.0000 to 0x41C4.01FF	0x41C4.0000 to 0x41C4.01FF
	FACTORY Uncorrected	0x41C5.0000 to 0x41C5.01FF	0x41C5.0000 to 0x41C5.01FF
	FACTORY ECC code	0x41C6.0000 to 0x41C6.01FF	0x41C6.0000 to 0x41C6.01FF
Subsystem		0x6000.0000 to 0x7FFF.FFFF	0x6000.0000 to 0x7FFF.FFFF
System PPB		0xE000.0000 to 0xE00F.FFFF	0xE000.0000 to 0xE00F.FFFF

8.8.2 Peripheral File Map

Table 8-6 lists the available peripherals and the register base address for each.

Copyright © 2025 Texas Instruments Incorporated

Table 8-6. Peripherals Summary

Peripheral Name	Base Address	Size
ADC0	0x4000.4000	0x2000
VREF	0x4003.0000	0x2000
WWDT0	0x4008.0000	0x2000
TIMG0	0x4008.4000	0x2000
TIMG8	0x4009.0000	0x2000
RTC_B	0x4009.4000	0x2000
GPIOA	0x400A.0000	0x2000
GPIOB	0x400A.2000	0x2000
KEYSTORE	0x400A.C000	0x2000
SYSCTL	0x400A.F000	0x4000
DEBUGSS	0x400C.7000	0x2000
EVENT	0x400C.9000	0x3000
NVMNW	0x400C.D000	0x2000
I2C0	0x400F.0000	0x2000
UART1	0x4010.0000	0x2000
UART0	0x4010.8000	0x2000
MCPUSS	0x4040.0000	0x2000
MTB	0x4040.2000	0x1000
MTBRAM	0x4040.3000	0x0020
IOMUX	0x4042.8000	0x2000
DMA	0x4042.A000	0x2000
CRC	0x4044.0000	0x2000
AESADV	0x4044.2000	0x2000
TRNG	0x4044.4000	0x2000
SPIO	0x4046.8000	0x2000
TIMG1	0x4048.6000	0x2000
ADC0[1]	0x4055.6000	0x2000
TIMA0	0x4086.0000	0x2000

1. Aliased region of ADC0 memory-mapped registers

8.8.3 Peripheral Interrupt Vector

Table 8-7 shows the IRQ number and the interrupt group number for each peripherals in this device.

Table 8-7. Interrupt Vector Number

Peripheral Name	NVIC IRQ	Group IIDX
WWDT0	0	0
DEBUGSS	0	2
FLASHCTL	0	3
EVENT SUB PORT 0	0	4
EVENT SUB PORT 1	0	5
SYSCTL	0	6
GPIOA	1	0
GPIOB	1	1
TRNG	1	5
TIMG8	2	-

Copyright © 2025 Texas Instruments Incorporated

Table 8-7. Interrupt Vector Number (continued)

Peripheral Name	NVIC IRQ	Group IIDX
ADC0	4	-
SPI0	9	-
UART1	13	-
UART0	15	-
TIMG0	16	-
TIMA0	18	-
TIMG1	22	-
I2C0	24	-
AESADV	28	-
RTC_B	30	-
DMA0	31	-

8.9 Flash Memory

A dual bank of non-volatile flash memory (up to 64kB/128kB total) is provided for storing executable program code and application data.

Key features of the flash include:

- Hardware ECC protection (encode and decode) with single bit error correction and double-bit error detection
- In-circuit program and erase operations supported across the entire recommended supply range
- Small 1kB sector sizes (minimum erase resolution of 1kB)
- Up to 100,000 program/erase cycles on the 32 selected sectors of the flash memory, with up to 10,000 program/erase cycles on the remaining flash memory (devices with 32kB support 100,000 cycles on the entire flash memory)
- Bank address swap for in-system, over-the-air (OTA) firmware updates

For more details, see the NVM chapter of the *MSPM0 L-Series 32-MHz Microcontrollers Technical Reference Manual*.

8.10 SRAM

MSPM0L111x MCUs include a low power, high performance SRAM memory with zero wait state access across the supported CPU frequency range of the device. MSPM0 MCUs also provide up to 16KB SRAM. SRAM memory may be used for storing volatile information such as the call stack, heap, global data, and code.

The SRAM memory content is fully retained in run, sleep, stop, and standby operating modes and is lost in shutdown mode.

A write-execute mutual exclusion mechanism is provided to allow the application to partition the SRAM into two sections: a read-write (RW) partition and a read-execute (RX) partition. The SRAMBOUNDARY register in SYSCTL needs to be configured to set up these partitions. The RX partition occupies the upper portion of the SRAM address space. Write protection is useful when placing executable code into SRAM as it provides a level of protection against unintentional overwrites of code by either the CPU or DMA. Placing code in SRAM can improve performance of critical loops by enabling zero wait state operation and lower power consumption. Preventing code execution from the RW partition improves security by preventing self-modifying code execution ability.

8.11 GPIO

The general purpose input/output (GPIO) peripheral provides the user with a means to write data out and read data in to and from the device pins. Through the use of the Port A and Port B GPIO peripheral, these devices support up to 44 GPIO pins .

The key features of the GPIO module include:

- 0 wait state MMR access from CPU

Copyright © 2025 Texas Instruments Incorporated

- Set/Clear/Toggle multiple bits without the need of a read-modify-write construct in software
- GPIOs with "Standard with Wake" drive functionality able to wake the device from SHUTDOWN mode
- User controlled input filtering
- GPIO "FastWake" feature enables low-power wakeup from STOP and STANDBY modes for any GPIO port

For more details, see the GPIO chapter of the *MSPM0 L-Series 32MHz Microcontrollers Technical Reference Manual*.

8.12 IOMUX

The IOMUX peripheral enables IO pad configuration and controls digital data flow to and from the device pins. The key features of the IOMUX include:

- IO pad configuration registers allow for programmable drive strength, speed, pullup or pulldown, and more
- Digital pin muxing allows for multiple peripheral signals to be routed to the same IO pad
- Pin functions and capabilities are user-configured using the PINCM register

For more details, see the IOMUX chapter of the *MSPM0 L-Series 32MHz Microcontrollers Technical Reference Manual*.

8.13 ADC

The 12-bit analog-to-digital converter (ADC) module in these devices support fast 12-bit conversions with single-ended inputs.

ADC features include:

- 12-bit output resolution at up to 1.68Msps with greater than 11-bit ENOB
- HW averaging enables 14-bit conversion resolution at 105ksps
- Up to 13 external input channels
- Internal channels for temperature sensing and supply monitoring
- Software selectable reference:
  - Configurable internal dedicated ADC reference voltage of 1.4V and 2.5V (VREF)
  - MCU supply voltage (VDD)
  - External reference supplied to the ADC through the VREF+ and VREF- pins
- Operates in RUN, SLEEP, and STOP modes and supports triggers from STANDBY mode

Table 8-8 shows the ADC channel connections.

Table 8-8. ADC0 Channel Mapping

Channel [0:15]	Signal Name (ADC0)	Channel [16:31]	Signal Name (ADC0)[1] [2]
0	A0_0	16	-
1	A0_1	17	-
2	A0_2	18	-
3	A0_3	19	-
4	A0_4	20	-
5	A0_5	21	-
6	A0_6	22	-
7	A0_7	23	-
8	A0_8	24	-
9	A0_9	25	-
10	-	26	-
11	*Temperature Sensor*	27	-
12	A0_12	28	*Internal VREF*

Copyright © 2025 Texas Instruments Incorporated

Table 8-8. ADC0 Channel Mapping (continued)

Channel [0:15]	Signal Name (ADC0)	Channel [16:31]	Signal Name (ADC0)(1) (2)
13	A0_13	29	-
14	A0_14	30	-
15	-	31	*Supply/Battery Monitor*

(1) *Italicized* signal names are internal to the SoC. These signals are used for internal peripheral interconnections.
(2) For more information about device analog connections see Section 8.29.

For more details, see the ADC chapter of the *MSPM0 L-Series 32MHz Microcontrollers Technical Reference Manual*.

8.14 Temperature Sensor

The temperature sensor provides a voltage output that changes linearly with device temperature. The temperature sensor output is internally connected to one of ADC input channels to enable a temperature-to-digital conversion.

A unit-specific single-point calibration value for the temperature sensor is provided in the factory constants memory region. This calibration value represents the ADC conversion result (in ADC code format) corresponding to the temperature sensor being measured in 12-bit mode with the 1.4V internal VREF at the factory trim temperature (TS_{TRIM}).

The ADC and VREF configuration for the above measurement is as the following: RES=0 (12-bit mode), VRSEL=2h (Internal reference), BUFCONFIG=1h (1.4V VREF), ADC t_{Sample}=12.5µs. This calibration value can be used with the temperature sensor temperature coefficient (TS_c) to estimate the device temperature.

Per-unit TS_c calculation method (using V_{TRIM_0K})

An additional unit-specific calibration value (V_{TRIM_0K}) is provided for use in calculating per-unit TS_c performance. This calibration value represents the ADC conversion result (in ADC code format) corresponding to the temperature sensor being measured in 12-bit mode with the 1.4V internal VREF at 0°K (or -273.15°C) and is stored in the factory constants memory region (as TEMP_SENSE_0KELVIN at address 0x41C4.0040).

The temperature coefficient TS_C can then be calculated using the formula below:

$$\mathbf{TS_C} = (V_{SAMPLE} - V_{TRIM_0K}) / (T_{SAMPLE} - T_{0K}) \quad (1)$$

Example

To illustrate the process of calculating the temperature sensor coefficient using this method, an example is given below.

Example parameters:

- V_{SAMPLE} = 0.6427V
- V_{TRIM_0K} = 1.2033V
- T_{SAMPLE} = 30°C

The resulting unit-specific temperature coefficient is calculated as:

$$\mathbf{TS_C} = (0.6427V - 1.2033V) / (30°C + 273.15°C) = -1.8492mV/°C \quad (2)$$

See the temperature sensor section of the *MSPM0 L-Series 32MHz Microcontrollers Technical Reference Manual* for guidance on estimating the device temperature with the factory trim value.

Copyright © 2025 Texas Instruments Incorporated

8.15 VREF

The voltage reference module (VREF) in these devices contains a configurable voltage reference buffer dedicated for the on-board ADC. The devices also support connection of an external reference for applications in which higher accuracy is required.

VREF features include:

- 1.4V and 2.5V user-selectable internal reference for ADC
- Internal reference supports ADC operation up to 200 ksps
- Support for bringing in an external reference on VREF+/- device pins

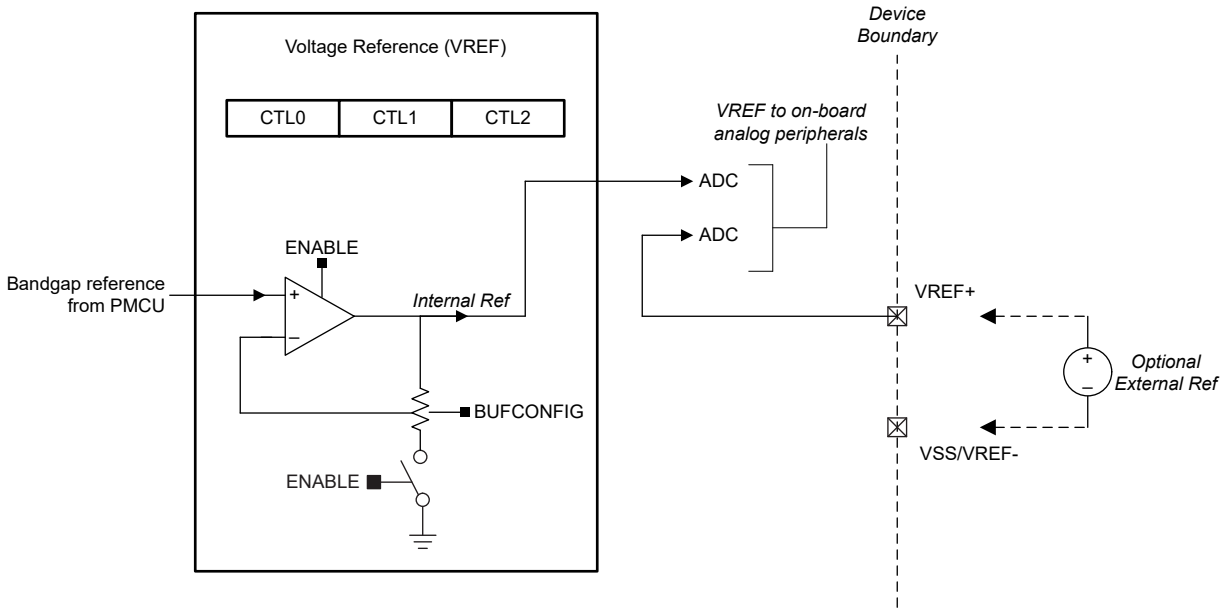

Figure 8-2. VREF module

For more details, see the VREF chapter of the *MSPM0 L-Series 32MHz Microcontrollers Technical Reference Manual* .

8.16 Security

This device offers several security features, including:

- Debug security
- Device identify
- AES-128/256 accelerator with support for GCM/GMAC, CCM/CBC-MAC, CBC, CTR
- Flexible firewalls for protecting code and data
  - Flash write-erase protection
  - Flash read-execute protection
  - Flash IP protection
  - SRAM write-execute mutual exclusion
- Secure boot
- Secure firmware update
- Secure key storage for up to two AES keys
- Customer secure code
- Hardware monotonic counter
- True random number generator (TRNG)
- Cyclic redundancy checker (CRC-16, CRC-32) with support for custom polynomial

For more details, see the Security chapter of the *MSPM0 L-Series 32MHz Microcontrollers Technical Reference Manual* .

Copyright © 2025 Texas Instruments Incorporated

8.17 TRNG

The true random number generator (TRNG) utilizes an internal circuit to generate 32-bit random numbers. The TRNG is intended to be used as a source to a deterministic random number generator (DRNG) to build a FIPS-140-2 compliant system. Key features of the TRNG include:

- Generation of 32-bit random numbers
- A new 32-bit number may be generated every 32 * 4 = 128 TRNG clock cycles
- Built-in health tests
- Available in RUN and SLEEP modes

For more details, see the TRNG chapter of the *MSPM0 L-Series 32MHz Microcontrollers Technical Reference Manual*.

8.18 AESADV

The AES advanced (AESADV) accelerator module performs encryption and decryption of 128-bit data blocks with a 128-bit or 256-bit key in hardware according to the advanced encryption standard (AES). AES is a symmetric-key block cipher algorithm specified in FIPS PUB 197.

The AESADV accelerator features include:

- AES operation with 128-bit and 256-bit keys
- Key scheduling in hardware
- Enc/decrypt only modes: CBC, CFB-1, CFB-8, CFB-128, OFB-128, CTR/ICM
- Authentication only modes: CBC-MAC, CMAC
- AES-CCM
- AES-GCM
- AES-CCM and AES-GCM modes support continuation with hold/resume of payload data
- 32-bit word access to provide key data, input data, and output data
- AESADV ready interrupt
- DMA triggers for input/output data
- Supported in RUN and SLEEP (see the *Operating Modes* section of the device technical reference manual)

For more details, see the AESADV chapter of the *MSPM0 L-Series 32MHz Microcontrollers Technical Reference Manual* .

8.19 Keystore

The Keystore controller provides secure management of the Advanced Encryption Engine (AES) keys. The use-model of the keystore controller is to securely deposit keys into it during the execution of customer secure code, and have the AES engine access them subsequently in a secure manner without leaking any key data to observers. Both 128 and 256-bit keys can be stored in the keystore's key slots. The keystore and its interaction with the AES engine are designed for secure operation including thwarting partial key modification attacks.

- Support for storage of up to 2 keys

For more details, see the KEYSTORE chapter of the *MSPM0 L-Series 32MHz Microcontrollers Technical Reference Manual* .

8.20 CRC-P

The cyclical redundancy check (CRC) module provides a signature for an input data sequence. Key features of the CRC module include:

- Support for 16-bit CRC based on CRC16-CCITT
- Support for 32-bit CRC based on CRC32-ISO3309
- Support for bit reversal
- Support for custom polynomials

Copyright © 2025 Texas Instruments Incorporated

For more details, see the CRC chapter of the *MSPM0 L-Series 32MHz Microcontrollers Technical Reference Manual*.

8.21 UART

The UART peripherals provide the following key features:

- Standard asynchronous communication bits for start, stop, and parity
- Fully programmable serial interface
  - 5, 6, 7 or 8 data bits
  - Even, odd, stick, or no-parity bit generation and detection
  - 1 or 2 stop bit generation
  - Line-break detection
  - Glitch filter on the input signals
  - Programmable baud rate generation with oversampling by 16, 8 or 3
  - Local Interconnect Network (LIN) mode support
- Separated transmit and receive FIFOs support DMA data transfer
- Support transmit and receive loopback mode operation
- See Table 8-9 for detail information on supported protocols

Table 8-9. UART Features

UART Features	UART0 (Extend, low-power)	UART1 (Main, low-power)
Active in Stop and Standby Mode	Yes	Yes
Separate transmit and receive FIFOs	Yes	Yes
Support hardware flow control	Yes	Yes
Support 9-bit configuration	Yes	Yes
Support LIN mode	Yes	-
Support DALI	Yes	-
Support IrDA	Yes	-
Support ISO7816 Smart Card	Yes	-
Support Manchester coding	Yes	-

For more details, see the UART chapter of the *MSPM0 L-Series 32MHz Microcontrollers Technical Reference Manual*

8.22 I2C

The inter-integrated circuit interface (I^2C) peripherals in these devices provide bidirectional data transfer with other I2C devices on the bus and support the following key features:

- 7-bit and 10-bit addressing mode with multiple 7-bit target addresses
- Multiple-controller transmitter or receiver mode
- Target receiver or transmitter mode with configurable clock stretching
- Support Standard-mode (Sm), with a bit rate up to 100 kbit/s
- Support Fast-mode (Fm), with a bit rate up to 400 kbit/s
- Support Fast-mode Plus (Fm+), with a bit rate up to 1 Mbit/s
  - Supported on open drain IOs only (ODIO)
- Separated transmit and receive FIFOs support DMA data transfer
- Support SMBus 3.0 with PEC, ARP, timeout detection and host support
- Wakeup from low power mode on address match
- Support analog and digital glitch filter for input signal glitch suppression
- 8-entry transmit and receive FIFOs

For more details, see the I2C chapter of the *MSPM0 L-Series 32MHz Microcontrollers Technical Reference Manual*.

Copyright © 2025 Texas Instruments Incorporated

8.23 SPI

The serial peripheral interface (SPI) peripheral in these devices support the following key features:

- Support MCLK/2 bit rate and up to 16Mbits/s in both controller and peripheral mode
- Configurable as a controller or a peripheral
- Configurable chip select for both controller and peripheral
- Programmable clock prescaler and bit rate
- Programmable data frame size from 4 bits to 16 bits (controller mode) and 7 bits to 16 bit (peripheral mode)
- Supports PACKEN feature that allows the packing of two 16 bit FIFO entries into a 32-bit value to improve CPU performance
- Transmit and receive FIFOs (four entries each with 16 bits per entry) supporting DMA data transfer
- Supports TI mode, Motorola mode and National Microwire format

For more details, see the SPI chapter of the *MSPM0 L-Series 32MHz Microcontrollers Technical Reference Manual*.

8.24 Low-Frequency Sub System (LFSS)

The Low-Frequency Sub-System (LFSS) is a sub-system which combines several functional peripherals under one shared subsystem. These peripherals are clocked by the low frequency clock (LFCLK) or need to be active during low power modes. The LFCLK has a typical frequency of 32kHz and is mainly intended for long-term timekeeping.

LFSS_B is the specific LFSS variant in this device and contains following components:

- Real Time Clock with additional prescalar extension and timestamp captures
- An asynchronous Independent Watchdog Timer

For more details, see the LFSS chapter of the *MSPM0 L-Series 32MHz Microcontrollers Technical Reference Manual* .

8.25 RTC_B

The RTC_B instance of the real-time clock operates off of a 32kHz input clock source (typically a low frequency crystal) and provides a time base to the application with multiple options for interrupts to the CPU. The RTC_B provides common key features in relation to the Low-Frequency Sub System (LFSS).

Common key features of the RTC_B include:

- Counters for seconds, minutes, hours, day of the week, day of the month, month, and year
- Binary or BCD format
- Leap-year handling
- One customizable alarm interrupt based on minute, hour, day of the week, and day of the month
- Interval alarm interrupt to wake every minute, every hour, at midnight, or at noon
- Interval alarm interrupt providing periodic wake-up at 4096, 2048, 1024, 512, 256, or 128 Hz
- Interval alarm interrupt providing periodic wake-up at 64, 32, 16, 8, 4, 2, 1, and 0.5 Hz
- Calibration for crystal offset error (up to +/- 240ppm)
- Compensation for temperature drift (up to +/- 240ppm)
- RTC clock output to pin for calibration

Table 8-10 shows the RTC features supported in this device.

Table 8-10. RTC_B Key Features

RTC Features	RTC_B
Power enable register	-
Real-time clock and calendar mode providing seconds, minutes, hours, day of week, day of month, and year	Yes
Selectable binary or binary-coded decimal (BCD) format	Yes
Leap-year correction (valid for year 1901 through 2099)	Yes

Copyright © 2025 Texas Instruments Incorporated

Table 8-10. RTC_B Key Features (continued)

RTC Features	RTC_B
Two customizable calendar alarm interrupts based on minute, hour, day of the week, and day of the month	Yes
Interval alarm interrupt to wake every minute, every hour, at midnight, or at noon	Yes
Periodic interrupt to wake at 4096, 2048, 1024, 512, 256, or 128Hz	Yes
Periodic interrupt to wake at 64, 32, 16, 8, 4, 2, 1, and 0.5Hz	Yes
Interrupt capability down to STANDBY mode with STOPCLKSTBY	Yes
Calibration for crystal offset error and crystal temperature drift (up to ±240 ppm total)	Yes
RTC clock output to pin for calibration (GPIO)	Yes
RTC clock output to pin for calibration (TIO)	-
Three -bit prescaler for heartbeat function with interrupt generation	-
RTC external clock selection of untrimmed 32kHz, trimmed 512Hz, 256Hz or 1Hz	-
RTC time stamp capture upon detection of a timer stamp event, including: • TIO event • VDD fail event	-
RTC counter lock function	-

For more details, see the RTC chapter of the *MSPM0 L-Series 32MHz Microcontrollers Technical Reference Manual*.

8.26 IWDT_B

The independent watchdog timer (IWDT) in the LFSS is a device-independent supervisor which monitors code execution and overall hang up scenarios of the device. Due to the nature of LFSS, this IWDT has its own system independent clock source. If the application software does not successfully reset the watchdog within the programmed time, the watchdog generates a POR reset to the device.

Key features of the IWDT include:

- A 25-bit counter
- Counter driven from LFOSC (fixed 32kHz clock path) with a programmable clock divider
- Eight selectable watchdog timer periods (2ms to 2hr)

For more details, see the IWDT chapter of the *MSPM0 L-Series 32MHz Microcontrollers Technical Reference Manual* .

8.27 WWDT

The windowed watchdog timer (WWDT) can be used to supervise the operation of the device, specifically code execution. The WWDT can be used to generate a reset or an interrupt if the application software does not successfully reset the watchdog within a specified window of time. Key features of the WWDT include:

- 25-bit counter
- Programmable clock divider
- Eight software selectable watchdog timer periods
- Eight software selectable window sizes
- Support for stopping the WWDT automatically when entering a sleep mode
- Interval timer mode for applications which do not require watchdog functionality

Copyright © 2025 Texas Instruments Incorporated

For more details, see the WWDT chapter of the *MSPM0 L-Series 32MHz Microcontrollers Technical Reference Manual*.

8.28 Timers (TIMx)

There are two types of timer peripherals in these devices support that following key features: TIMGx (general-purpose timer) and TIMAx (advanced timer). TIMGx is a subset of TIMAx, which means these timers share many common features that are compatible in software. For specific configuration, see Table 8-11.

Specific features for the general-purpose timer **(TIMGx)** include:

- 16-bit up, down, up-down or down-up counter, with repeat-reload mode
- Selectable and configurable clock source
- 8-bit programmable prescaler to divide the counter clock frequency
- Two independent CC channels for
  - Output compare
  - Input capture
  - PWM output
  - One-shot mode
- Support quadrature encoder interface (QEI) and Hall sensor input logic available in TIMG8
- Support synchronization and cross trigger among different TIMx instances in the same power domain (see Table 8-12)
- Support interrupt/DMA trigger generation and cross peripherals (such as ADC) trigger capability

Specific features for the advanced timer **(TIMAx)** include:

- 16-bit timer with up, down or up-down counting modes, with repeat-reload mode
- Selectable and configurable clock source
- 8-bit programmable prescaler to divide the counter clock frequency
- Repeat counter to generate an interrupt or event only after a given number of cycles of the counter
- Up to four independent CC channels for
  - Output compare
  - Input capture
  - PWM output
  - One-shot mode
- Two additional capture/compare channels for internal events (CC4/CC5)
- Shadow register for load and CC register available in TIMA0
- Complementary output PWM with programmable dead band insertion
- Asymmetric PWM
- Fault handling mechanism for
  - Fast PWM responses (<40ns) to external fault inputs or comparator events
  - Outputting signals in a safe user-defined state when a latched fault condition has occurred
- Support synchronization and cross trigger among different TIMx instances in the same power domain (see Table 8-12)
- Support interrupt and DMA trigger generation and cross peripherals (such as ADC) trigger capability
- Two additional capture/compare channels for internal events

Table 8-11. TIMx Instance Configuration

TIMER NAME	POWER DOMAIN	RESOLUTION	PRESCALER	REPEAT COUNTER	CAPTURE / COMPARE CHANNELS	PHASE LOAD	SHADOW LOAD	SHADOW CC	DEADBAND	FAULT	QEI
TIMG0	PD0	16 bit	8 bit	-	2	-	-	-	-	-	-
TIMG1	PD0	16 bit	8 bit	-	2	-	-	-	-	-	-
TIMG8	PD0	16 bit	8 bit	-	2	-	-	-	-	-	Yes
TIMA0	PD0	16 bit	8 bit	8 bit	4	Yes	Yes	Yes	Yes	Yes	-

Copyright © 2025 Texas Instruments Incorporated

Table 8-12. TIMx Cross Trigger Map (PD0)

TSEL.ETSEL Selection	TIMA0	TIMG0	TIMG1	TIMG8
0	TIMA0.TRIGO	TIMA0.TRIGO	TIMA0.TRIGO	TIMA0.TRIGO
1	TIMG0.TRIGO	TIMG0.TRIGO	TIMG0.TRIGO	TIMG0.TRIGO
2	TIMG1.TRIGO	TIMG1.TRIGO	TIMG1.TRIGO	TIMG1.TRIGO
3	TIMG8.TRIGO	TIMG8.TRIGO	TIMG8.TRIGO	TIMG8.TRIGO
4 to 15	Reserved			
16	Event Subscriber Port 0 (FSUB0)			
17	Event Subscriber Port 1 (FSUB1)			
18 to 31	Reserved			

For more details, see the TIMx chapter of the *MSPM0 L-Series 32MHz Microcontrollers Technical Reference Manual*.

8.29 Device Analog Connections

Figure 8-3 shows the internal analog connection of the device.

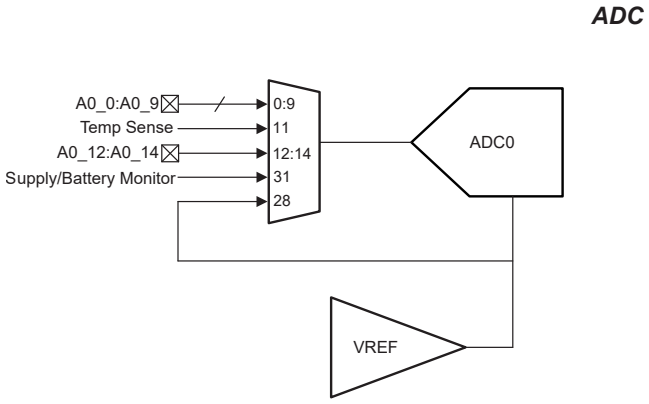

Figure 8-3. Analog Connections

8.30 Input/Output Diagrams

The IOMUX manages the selection of which peripheral function is to be used on a digital IO and provides the controls for the output driver, input path, and the wake-up logic for wakeup from SHUTDOWN mode. For more information, see the IOMUX section of the *MSPM0 L-Series 32MHz Microcontrollers Technical Reference Manual*.

The mixed-signal IO pin slice diagram for a full featured IO pin is shown in Figure 8-4. Not all pins have analog functions, wake-up logic, drive strength control, and pullup or pulldown resistors available. See the device-specific data sheet for detailed information on what features are supported for a specific pin.

Copyright © 2025 Texas Instruments Incorporated

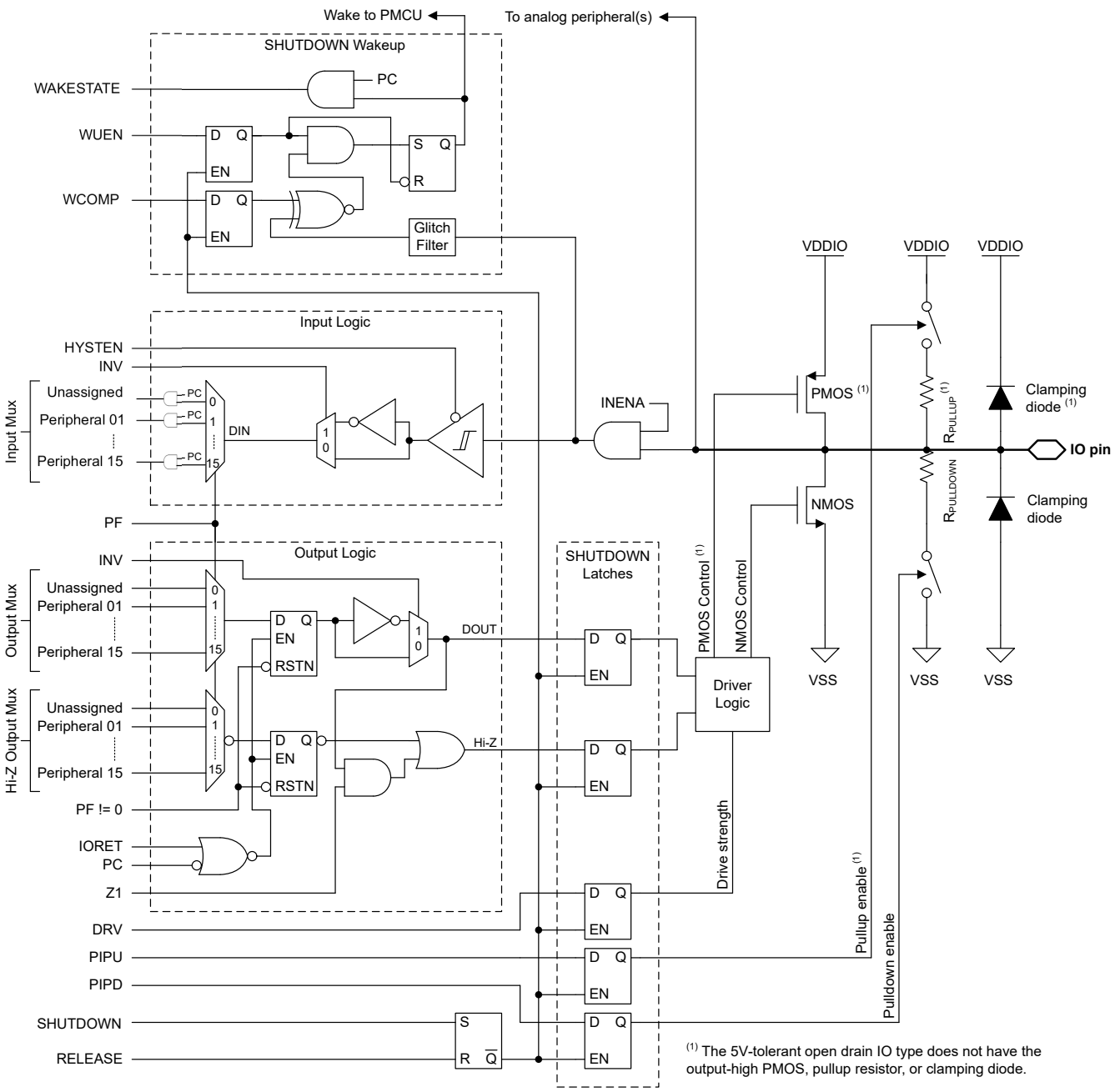

Figure 8-4. Superset Input/Output Diagram

8.31 Serial Wire Debug Interface

A serial wire debug (SWD) two-wire interface is provided via an Arm compatible serial wire debug port (SW-DP) to enable access to multiple debug functions within the device. For a complete description of the debug functionality offered on MSPM0 devices, see the DEBUG chapter of the *MSPM0 L-Series 32MHz Microcontrollers Technical Reference Manual*.

Table 8-13. Serial Wire Debug Pin Requirements and Functions

DEVICE SIGNAL	DIRECTION	SWD FUNCTION
SWCLK	Input	Serial wire clock from debug probe
SWDIO	Input/Output	Bi-directional (shared) serial wire data

Copyright © 2025 Texas Instruments Incorporated

8.32 Bootstrap Loader (BSL)

The bootstrap loader (BSL) enables configuration of the device as well as programming of the device memory through a UART or I2C serial interface. Access to the device memory and configuration through the BSL is protected by a 256-bit user-defined password, and it is possible to completely disable the BSL in the device configuration, if desired. The BSL is enabled by default from TI to support use of the BSL for production programming.

A minimum of two pins are required to use the BSL: the BSLRX and BSLTX signals (for UART), or the BSLSCL and BSLSDA signals (for I^2C). Additionally, one or two additional pins (BSL_invoke and NRST) may be used for controlled invocation of the bootloader by an external host.

If enabled, the BSL may be invoked (started) in the following ways:

- The BSL is invoked during the boot process if the BSL_invoke pin state matches the defined BSL_invoke logic level. If the device fast boot mode is enabled, this invocation check is skipped. An external host can force the device into the BSL by asserting the invoke condition and applying a reset pulse to the NRST pin to trigger a BOOTRST, after which the device will verify the invoke condition during the reboot process and start the BSL if the invoke condition matches the expected logic level.
- The BSL is automatically invoked during the boot process if the reset vector and stack pointer are left unprogrammed. As a result, a blank device from TI will invoke the BSL during the boot process without any need to provide a hardware invoke condition on the BSL_invoke pin. This enables production programming using just the serial interface signals.
- The BSL may be invoked at runtime from application software by issuing a SYSRST with BSL entry command.

Table 8-14. BSL Pin Requirements and Functions

DEVICE SIGNAL	CONNECTION	BSL FUNCTION
BSLRX	Required for UART	UART receive signal (RXD), an input
BSLTX	Required for UART	UART transmit signal (TXD) an output
BSLSCL	Required for I2C	I^2C BSL clock signal (SCL)
BSLSDA	Required for I2C	I^2C BSL data signal (SDA)
BSL_invoke	Optional	Active-high digital input used to start the BSL during boot
NRST	Optional	Active-low reset pin used to trigger a reset and subsequent check of the invoke signal (BSL_invoke)

For a complete description of the BSL functionality and command set, see the MSPM0 boot strap loader user's guide.

8.33 Device Factory Constants

All devices include a memory-mapped FACTORY region which provides read-only data describing the capabilities of a device as well as any factory-provided trim information for use by application software. Refer to the *Factory Constants* chapter of the *MSPM0 L-Series 32MHz Microcontrollers Technical Reference Manual*.

Table 8-15. DEVICEID

DEVICEID address is 0x41C4.0004, PARTNUM is bit 12 to 27, MANUFACTURER is bit 1 to 11.

DEVICE	PARTNUM	MANUFACTURER
MSPM0L1116	0xBBB4	0x17
MSPM0L1117	0xBBB4	0x17

Copyright © 2025 Texas Instruments Incorporated

Table 8-16. USERID

USERID address is 0x41C4.0008, PART is bit 0 to 15, VARIANT is bit 16 to 23

Device	Part	Variant
MSPM0L1116SRGER	0xE284	0x77
MSPM0L1116SRHBR	0xE284	0x78
MSPM0L1116SRGZR	0xE284	0x79
MSPM0L1116SPTR	0xE284	0x7A
MSPM0L1117SRGER	0xAF6C	0xB0
MSPM0L1117SRHBR	0xAF6C	0xB1
MSPM0L1117SRGZR	0xAF6C	0xB2
MSPM0L1117SPTR	0xAF6C	0xB3

8.34 Identification

Revision and Device Identification

The hardware revision and device identification values are stored in the memory-mapped FACTORY region (see the Device Factory Constants section) which provides read-only data describing the capabilities of a device as well as any factory-provided trim information for use by application software. For more information, see the *Factory Constants* chapter of the *MSPM0 L-Series 32MHz Microcontrollers Technical Reference Manual*.

The device revision and identification information are also included as part of the top-side marking on the device package. The device-specific errata describes these markings (see Section 10.3).

Copyright © 2025 Texas Instruments Incorporated

9 Applications, Implementation, and Layout

9.1 Typical Application

Note

Information in the following applications sections is not part of the TI component specification, and TI does not warrant its accuracy or completeness. TI's customers are responsible for determining suitability of components for their purposes, as well as validating and testing their design implementation to confirm system functionality.

9.1.1 Schematic

TI recommends connecting a combination of a 10µF and a 0.1µF low-ESR ceramic decoupling capacitor across the VDD and VSS pins, as well as placing these capacitors as close as possible to the supply pins that they decouple (within a few millimeters) to achieve a minimal loop area. The 10µF bulk decoupling capacitor is a recommended value for most applications, but this capacitance may be adjusted if needed based upon the PCB design and application requirements. For example, larger bulk capacitors can be used, but this can affect the supply rail ramp-up time.

The NRST reset pin must be pulled up to VDD (supply level) for the device to release from RESET state and start the boot process. TI recommends connecting an external 47kΩ pullup resistor with a 10nF pulldown capacitor for most applications, enabling the NRST pin to be controlled by another device or a debug probe.

The SYSOSC frequency correction loop (FCL) circuit utilizes an external 100kΩ with 0.1% tolerance resistor with a temperature coefficient (TCR) of 25ppm/C or better populated between the ROSC pin and VSS. This resistor establishes a reference current to stabilize the SYSOSC frequency through a correction loop. This resistor is required if the FCL feature is used for higher accuracy, and it is not required if the SYSOSC FCL is not enabled. When the FCL mode is not used, the PA2 pin may be used as a digital input/output pin.

A 0.47µF tank capacitor is required for the VCORE pin and must be placed close to the device with minimum distance to the device ground. Do not connect other circuits to the VCORE pin.

For the 5V-tolerant open drain (ODIO), a pullup resistor tied to a voltage reference (e.g 3.3V supply rail) is required to output high as the open drain IO only implement a low-side NMOS driver and no high-side PMOS driver.

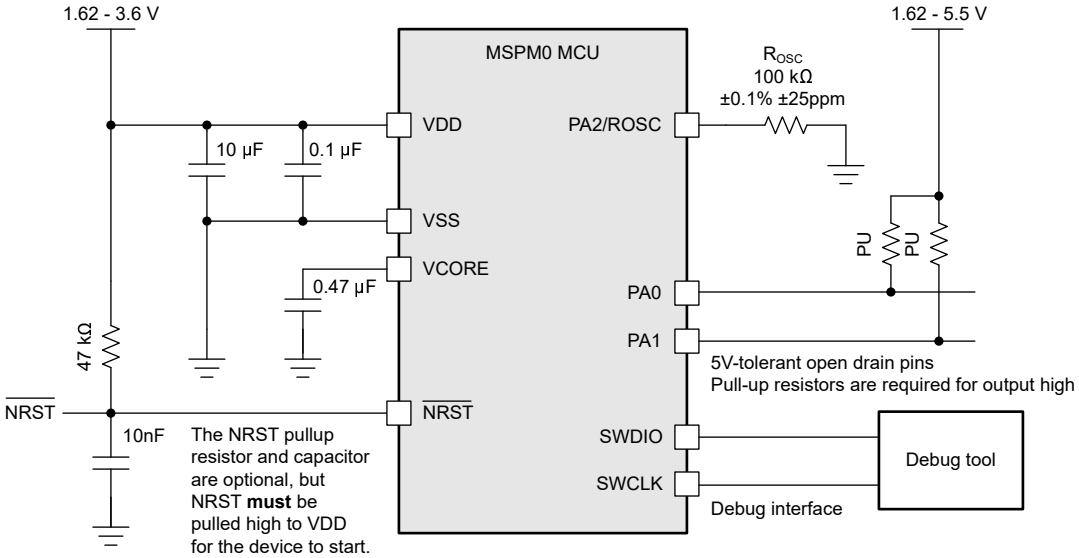

Figure 9-1. Basic Application Schematic

Copyright © 2025 Texas Instruments Incorporated

10 Device and Documentation Support

TI offers an extensive line of development tools. Tools and software to evaluate the performance of the device, generate code, and develop solutions are listed below.

10.1 Device Nomenclature

To designate the stages in the product development cycle, TI assigns prefixes to the part numbers of all MSP MCU devices and support tools. Each MSP MCU commercial family member has one of two prefixes: MSP or X. These prefixes represent evolutionary stages of product development from engineering prototypes (X) through fully qualified production devices (MSP).

X or XMS – Experimental device that is not necessarily representative of the final device's electrical specifications

MSP – Fully qualified production device

X and XMS devices are shipped against the following disclaimer:

"Developmental product is intended for internal evaluation purposes." MSP devices have been characterized fully, and the quality and reliability of the device have been demonstrated fully. TI's standard warranty applies. Predictions show that prototype devices (X) have a greater failure rate than the standard production devices. TI recommends that these devices not be used in any production system because their expected end-use failure rate still is undefined. Only qualified production devices are to be used.

TI device nomenclature also includes a suffix with the device family name. This suffix indicates the temperature range, package type, and distribution format. Figure 10-1 provides a legend for reading the complete device name.

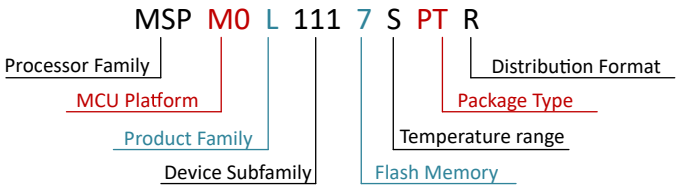

Figure 10-1. Device Nomenclature

Table 10-1. Device Nomenclature

Processor Family	MSP = Mixed-signal processor X, XMS = Experimental silicon
MCU Platform	M0 = Arm-based 32-bit M0+
Product Family	L = 32MHz frequency
Device Subfamily	111x = ADC
Internal Memory	6 = 64KB flash, 16KB SRAM 7 = 128KB flash, 16KB SRAM
Temperature Range	S = –40°C to 125°C
Package Type	See Section 5 and www.ti.com/packaging
Distribution Format	T = Small reel R = Large reel No marking = Tube or tray

For orderable part numbers of MSP devices in different package types, see the Package Option Addendum of this document, ti.com, or contact your TI sales representative.

Copyright © 2025 Texas Instruments Incorporated

10.2 Tools and Software

Design Kits and Evaluation Modules

MSPM0 LaunchPad Development Kit: LP-MSPM0L1117	Empowers you to immediately start developing on the industry's best integrated analog and most cost-optimized general purpose MSPM0 MCU family. Exposes all device pins and functionality; includes some built-in circuitry, out-of-box software demos, and on-board XDS110 debug probe for programming, debugging, and EnergyTrace™ technology. The LaunchPad ecosystem includes dozens of BoosterPack™ stackable plug-in modules to extend functionality.

Embedded Software

MSPM0 Software Development Kit (SDK)	Contains software drivers, middleware libraries, documentation, tools, and code examples that create a familiar and easy user experience for all MSPM0 devices.

Software Development Tools

TI Cloud Tools	Start your evaluation and development on a web browser without any installation. Cloud tools also have a downloadable, offline version.
TI Resource Explorer	Online portal to TI SDKs. Accessible in CCS IDE or in TI Cloud Tools.
SysConfig	Intuitive GUI to configure device and peripherals, resolve system conflicts, generate configuration code, and automate pin mux settings. Accessible in CCS IDE or in TI Cloud Tools. (offline version)
MSP Academy	Great starting point for all developers to learn about the MSPM0 MCU Platform with training modules that span a wide range of topics. Part of TIRex.
GUI Composer	GUIs that simplify evaluation of certain MSPM0 features, such as configuring and monitoring a fully integrated analog signal chain without any code needed.

IDE and compiler tool chains

Code Composer Studio™ (CCS)	Code Composer Studio is an integrated development environment (IDE) for TI's microcontrollers and processors. It comprises a suite of tools used to develop and debug embedded applications. CCS is completely free to use and is available on Eclipse and Theia frameworks.
IAR Embedded Workbench® IDE	IAR Embedded Workbench for Arm delivers a complete development toolchain for building and debugging embedded applications for MSPM0.The included IAR C/C++ Compiler generates highly optimized code for your application, and the C-SPY Debugger is a fully integrated debugger for source and disassembly level debugging with support for complex code and data breakpoint.
Keil® MDK IDE	Arm Keil MDK is a complete debugger and C/C++ compiler toolchain for building and debugging embedded applications for MSPM0.Keil MDK includes a fully integrated debugger for source and disassembly level debugging. MDK provides full CMSIS compliance.
TI Arm-Clang	TI Arm Clang is included in the Code Composer Studio IDE.
GNU Arm Embedded Tool Chain	The MSPM0 SDK supports development using the open-source Arm GNU Toolchain. Arm GCC is supported by Code Composer Studio IDE (CCS).

10.3 Documentation Support

To receive notification of documentation updates, navigate to the device product folder on ti.com. Click on *Notifications* to register and receive a weekly digest of any product information that has changed. For change details, review the revision history included in any revised document.

Copyright © 2025 Texas Instruments Incorporated

The following documents describe the MSPM0 MCUs. Copies of these documents are available on the Internet at www.ti.com.

Technical Reference Manual

MSPM0 L-Series 32MHz Microcontrollers Technical Reference Manual	This manual describes the modules and peripherals of the MSPM0L family of devices. Each description presents the module or peripheral in a general sense. Not all features and functions of all modules or peripherals are present on all devices. In addition, modules or peripherals can differ in their exact implementation on different devices. Pin functions, internal signal connections, and operational parameters differ from device to device. See the device-specific data sheet for these details.

10.4 Support Resources

TI E2E™ support forums are an engineer's go-to source for fast, verified answers and design help — straight from the experts. Search existing answers or ask your own question to get the quick design help you need.

Linked content is provided "AS IS" by the respective contributors. They do not constitute TI specifications and do not necessarily reflect TI's views; see TI's Terms of Use.

10.5 Trademarks

LaunchPad™, Code Composer Studio™, TI E2E™, EnergyTrace™, and BoosterPack™ are trademarks of Texas Instruments.
Arm® and Cortex® are registered trademarks of Arm Limited.
All trademarks are the property of their respective owners.

10.6 Electrostatic Discharge Caution



This integrated circuit can be damaged by ESD. Texas Instruments recommends that all integrated circuits be handled with appropriate precautions. Failure to observe proper handling and installation procedures can cause damage.

ESD damage can range from subtle performance degradation to complete device failure. Precision integrated circuits may be more susceptible to damage because very small parametric changes could cause the device not to meet its published specifications.

10.7 Glossary

TI Glossary	This glossary lists and explains terms, acronyms, and definitions.

11 Revision History

NOTE: Page numbers for previous revisions may differ from page numbers in the current version.

Changes from December 1, 2024 to May 31, 2025 (from Revision * (December 2024) to Revision A (June 2025)) **Page**

- Corrected list of I/O features....1
- Added note to indicate that this device is targeting PSA-L1 certification....1
- Updated Device Comparison section to tabulate communication peripheral instances....7
- Updated Pin Attributes section to correctly list IO types available in this device, and added footnote indicating SDIO with wake functionality....12
- Corrected Pin Attributes tables to indicate that GPIO PA2 is controlled by PINCM7 instead of PINCM61....12
- Corrected Pin Attributes tables to indicate that PA15 is a High-drive type IO (HDIO)....12
- Corrected Pin Attributes tables to indicate that PB24 is a standard type IO (SDIO)....12
- Updated Absolute Maximum Ratings for I_VDD and I_VSS to reflect correct junction temperatures and also remove VDD>=2.7V condition....26
- Added diode current rating for PB24 to Absolute Maximum Ratings....26
- Added ambient temperature rating to Absolute Maximum Ratings....26
- Added footnote to I_VDD and I_VSS guidelines for reduced current consumption when VDD supply voltage is low (e.g. 1.62V)....26

Copyright © 2025 Texas Instruments Incorporated

- Updated Supply Current Characteristics to include maximum values and accurate typical values..... 26
- Added Supply Current Characteristics parameter for per-MHz SLEEP current (assessed at 32MHz)..... 26
- Changed POR and BOR specifications to reflect accurate voltage thresholds for POR and coldboot BOR....26
- Updated POR and BOR specifications section to remove footnote for dVDD/dt condition..... 26
- Changed Flash Memory Characteristics to allow for users to designate any 32kB sectors of flash memory to apply 100k cycles, rather than only the lower 32kB sectors.....26
- Updated Timing Characteristics section with accurate specification values and corrected spec label for Wakeup time from STOP1 and STOP2 to RUN..... 26
- Updated System Oscillator specifications with accurate values.....26
- Removed SYSOSC Typical Frequency Accuracy Figure..... 26
- Removed LFXT specification for VDD power supply range, as specifications were already applicable for entire VDD operating range of the device..... 26
- Changed LFXT start-up time to indicate typical value of 1 second..... 26
- Updated Digital IO electrical characteristics to reflect ambient temperature conditions.....26
- Added rise/fall time specifications to Digital IO switching characteristics.....26
- Added footnote for HDIO DRV=1 condition to limit signal slew rate for high current operation..... 26
- Updated ADC specifications for SNR and PSRRDC to remove minimum values.....26
- Updated Temperature Sensor coefficient specification values..... 26
- Changed VREF electrical characteristics for I_VREF, TC_VREF, and PSRRDC specification values..... 26
- Removed Vnoise specifications from VREF electrical characteristics.....26
- Updated SPI specifications to reflect corrected setup and hold timing values..... 26
- Updated CPU description section to indicate support for memory protection unit (MPU)..... 44
- Updated Supported Functionality by Operating Mode table for accuracy and organization.....45
- Added detailed DMA Features table to DMA section..... 47
- Updated Flash Memory section to indicate that any 32kB sectors can be selected for high-endurance operation.....51
- Updated description in SRAM section regarding write-execute user operation..... 51
- Updated GPIO section to clarify that there are two GPIO ports in this device (PAx and PBx)..... 51
- Updated Temperature Sensor section to add details for per-unit TSc calculation method using V_TRIM_0K.53
- Updated VREF section to clarify that the VREF in this device does not require a decoupling capacitor on VREF+/- pins for proper operation, and also added a block diagram detailing VREF configurations. 54
- Updated Security section to list all security features present in this device..... 54
- Updated SPI section to reference MCLK rather than ULPCLK..... 57
- Updated LFSS section to indicate presence of LFSS_B and RTC_B variants.....57
- Updated Timers section to correctly detail capabilities of various timer instance types..... 59
- Updated Mechanical, Packaging, and Orderable Information section to append drawings for each package variant..... 69

Copyright © 2025 Texas Instruments Incorporated

12 Mechanical, Packaging, and Orderable Information

The following pages include mechanical, packaging, and orderable information. This information is the most current data available for the designated devices. This data is subject to change without notice and revision of this document. For browser-based versions of this data sheet, refer to the left-hand navigation.

Copyright © 2025 Texas Instruments Incorporated

RGE0024B

PACKAGE OUTLINE

VQFN - 1 mm max height

PLASTIC QUAD FLATPACK - NO LEAD

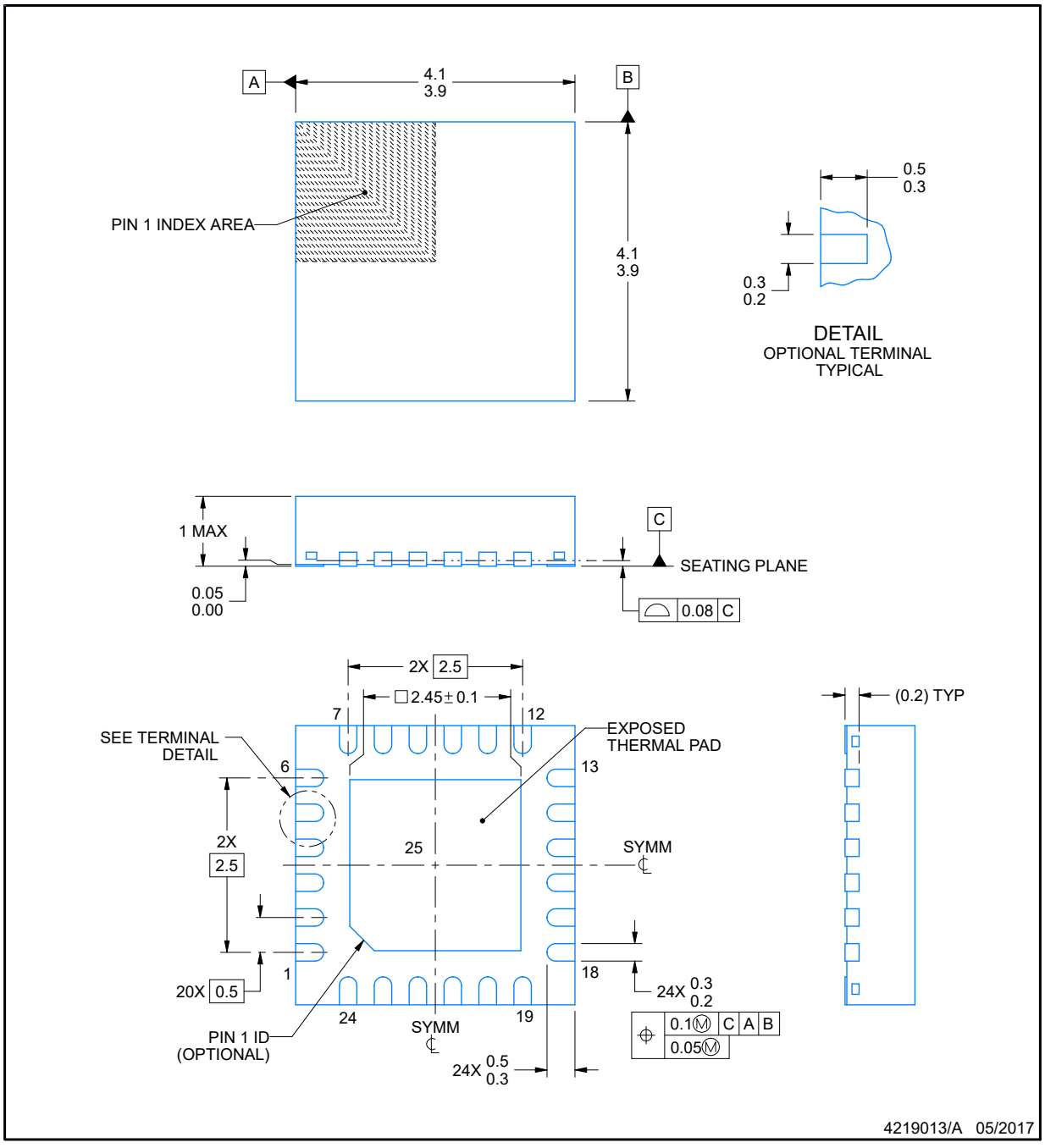

NOTES:

1. All linear dimensions are in millimeters. Any dimensions in parenthesis are for reference only. Dimensioning and tolerancing per ASME Y14.5M.
2. This drawing is subject to change without notice.
3. The package thermal pad must be soldered to the printed circuit board for thermal and mechanical performance.

Copyright © 2025 Texas Instruments Incorporated

EXAMPLE BOARD LAYOUT

RGE0024B

VQFN - 1 mm max height

PLASTIC QUAD FLATPACK - NO LEAD

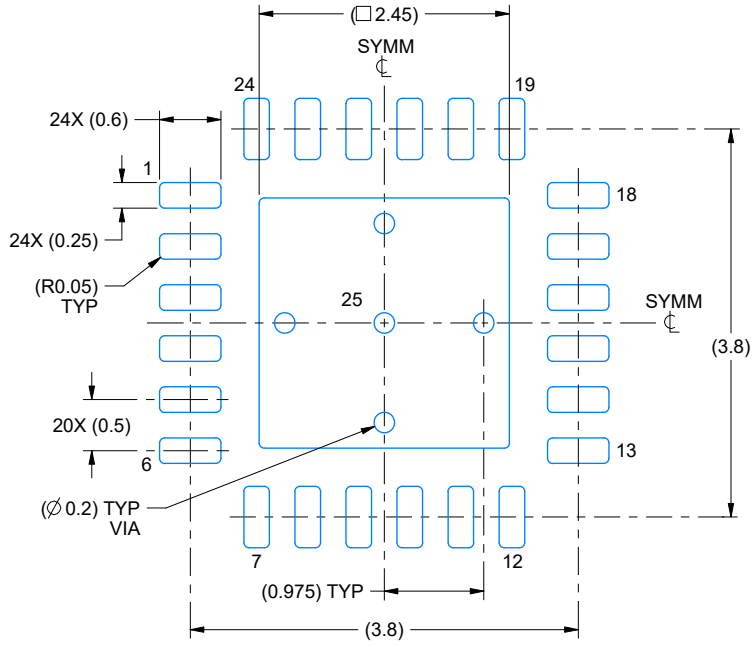

LAND PATTERN EXAMPLE
EXPOSED METAL SHOWN
SCALE:15X

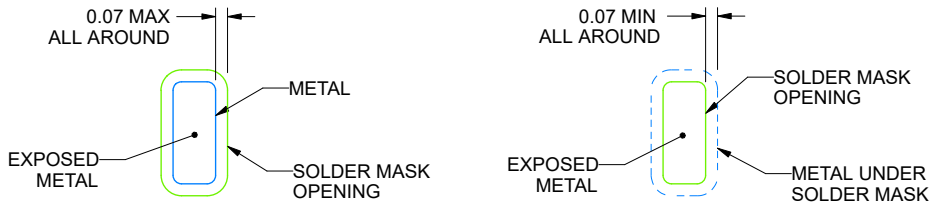

SOLDER MASK DETAILS

4219013/A 05/2017

NOTES: (continued)

4. This package is designed to be soldered to a thermal pad on the board. For more information, see Texas Instruments literature number SLUA271 (www.ti.com/lit/slua271).
5. Vias are optional depending on application, refer to device data sheet. If any vias are implemented, refer to their locations shown on this view. It is recommended that vias under paste be filled, plugged or tented.

Copyright © 2025 Texas Instruments Incorporated

EXAMPLE STENCIL DESIGN

RGE0024B

VQFN - 1 mm max height

PLASTIC QUAD FLATPACK - NO LEAD

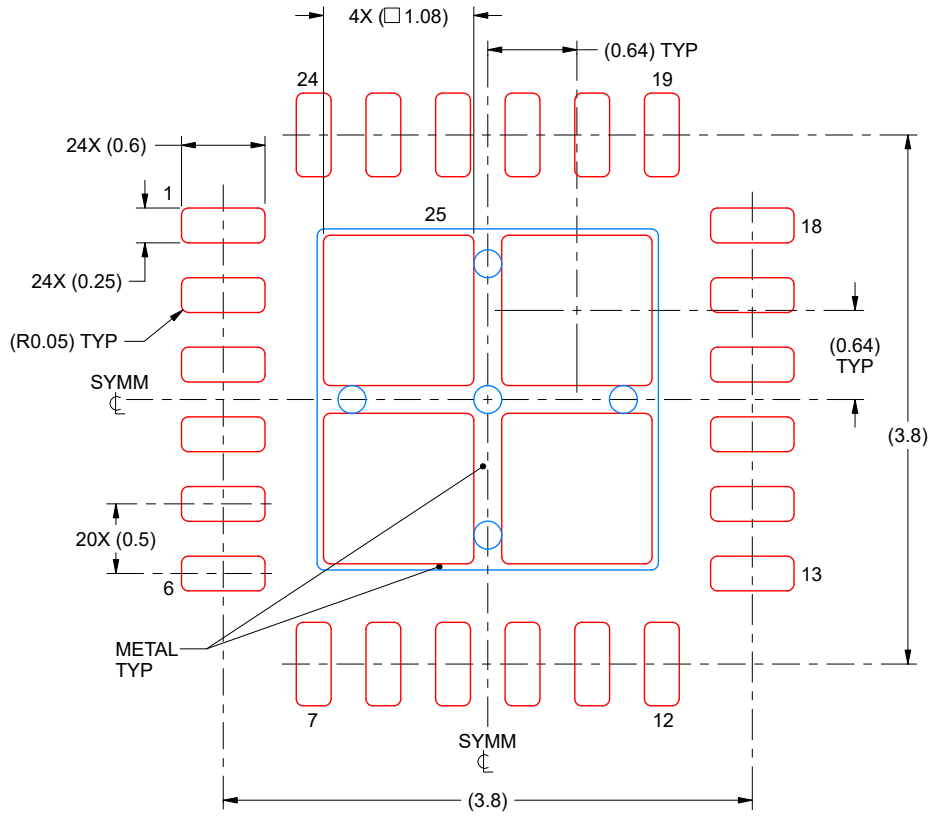

SOLDER PASTE EXAMPLE
BASED ON 0.125 mm THICK STENCIL

EXPOSED PAD 25
78% PRINTED SOLDER COVERAGE BY AREA UNDER PACKAGE
SCALE:20X

4219013/A 05/2017

NOTES: (continued)

6. Laser cutting apertures with trapezoidal walls and rounded corners may offer better paste release. IPC-7525 may have alternate design recommendations.

Copyright © 2025 Texas Instruments Incorporated

PACKAGE OUTLINE

RHB0032E

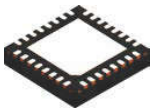

VQFN - 1 mm max height

PLASTIC QUAD FLATPACK - NO LEAD

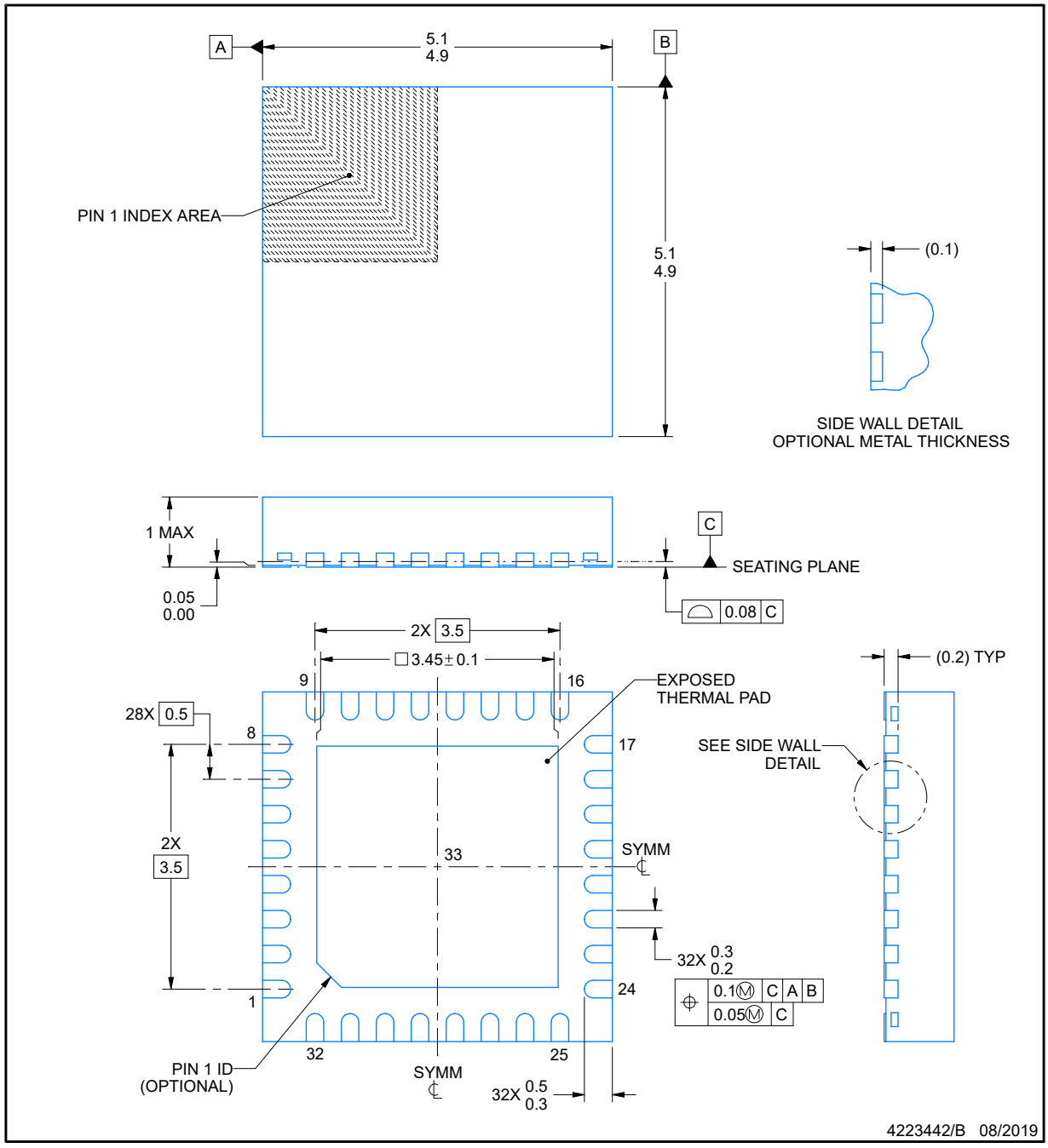

NOTES:

1. All linear dimensions are in millimeters. Any dimensions in parenthesis are for reference only. Dimensioning and tolerancing per ASME Y14.5M.
2. This drawing is subject to change without notice.
3. The package thermal pad must be soldered to the printed circuit board for thermal and mechanical performance.

Copyright © 2025 Texas Instruments Incorporated

EXAMPLE BOARD LAYOUT

RHB0032E

VQFN - 1 mm max height

PLASTIC QUAD FLATPACK - NO LEAD

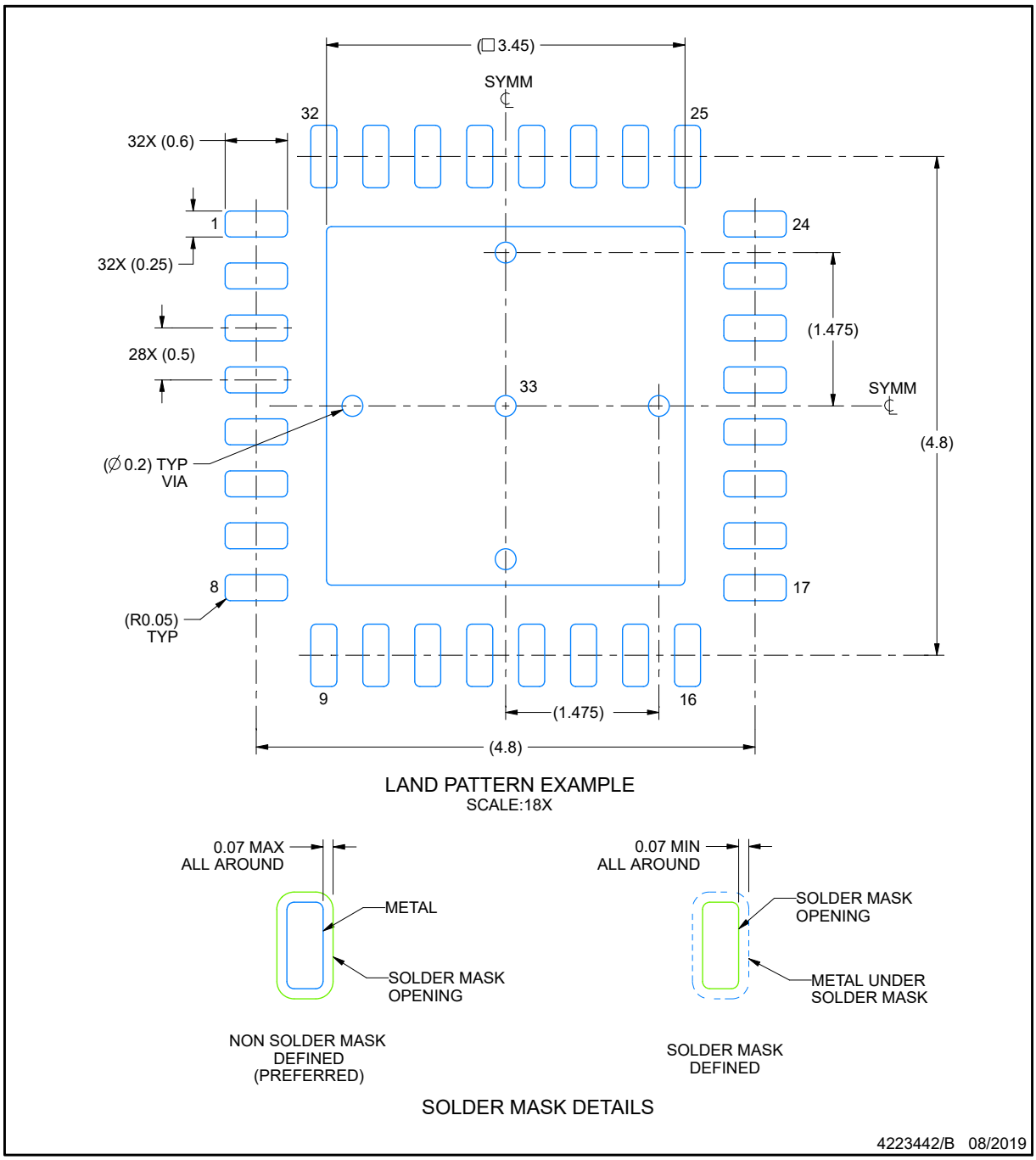

NOTES: (continued)

4. This package is designed to be soldered to a thermal pad on the board. For more information, see Texas Instruments literature number SLUA271 (www.ti.com/lit/slua271).
5. Vias are optional depending on application, refer to device data sheet. If any vias are implemented, refer to their locations shown on this view. It is recommended that vias under paste be filled, plugged or tented.

Copyright © 2025 Texas Instruments Incorporated

EXAMPLE STENCIL DESIGN

RHB0032E

VQFN - 1 mm max height

PLASTIC QUAD FLATPACK - NO LEAD

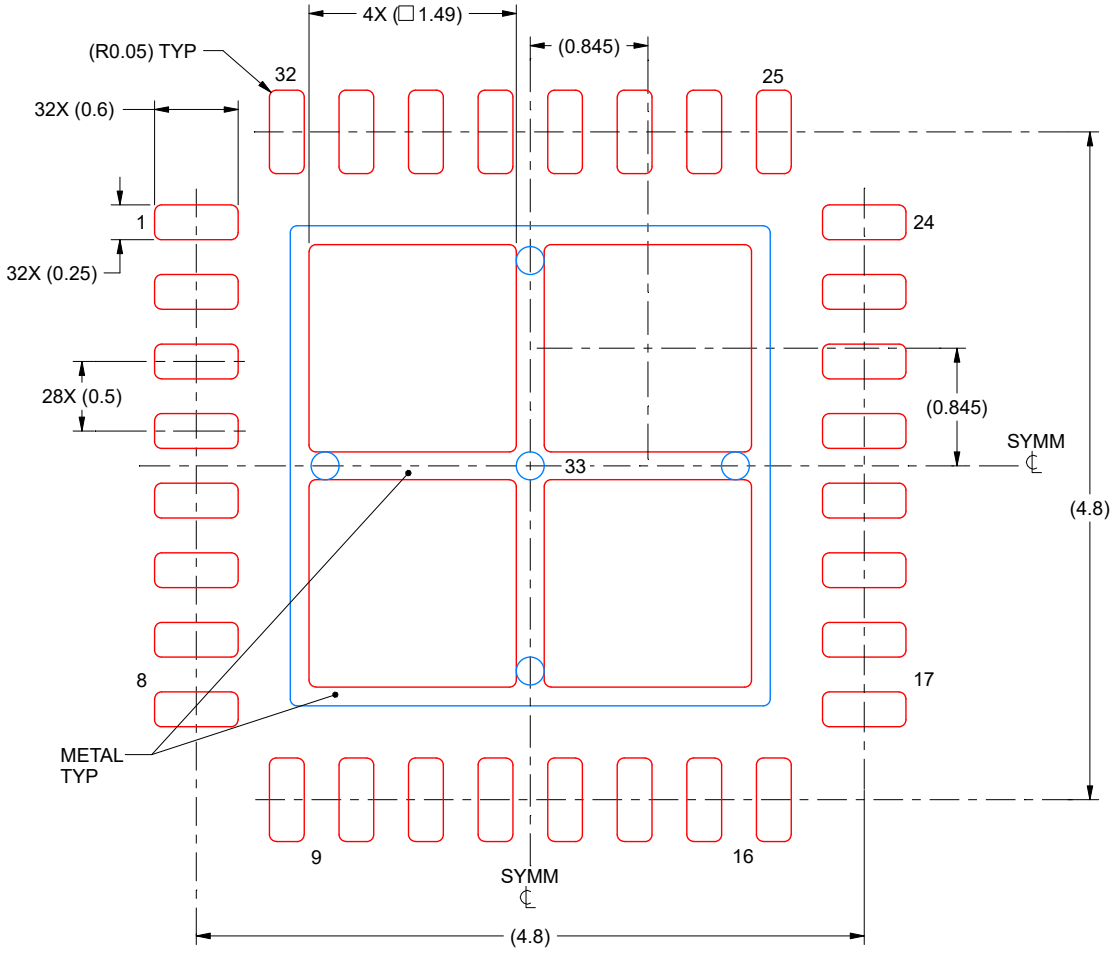

SOLDER PASTE EXAMPLE
BASED ON 0.125 mm THICK STENCIL

EXPOSED PAD 33:
75% PRINTED SOLDER COVERAGE BY AREA UNDER PACKAGE
SCALE:20X

4223442/B 08/2019

NOTES: (continued)

6. Laser cutting apertures with trapezoidal walls and rounded corners may offer better paste release. IPC-7525 may have alternate design recommendations.

Copyright © 2025 Texas Instruments Incorporated

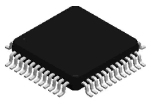

PACKAGE OUTLINE

PT0048A

LQFP - 1.6 mm max height

LOW PROFILE QUAD FLATPACK

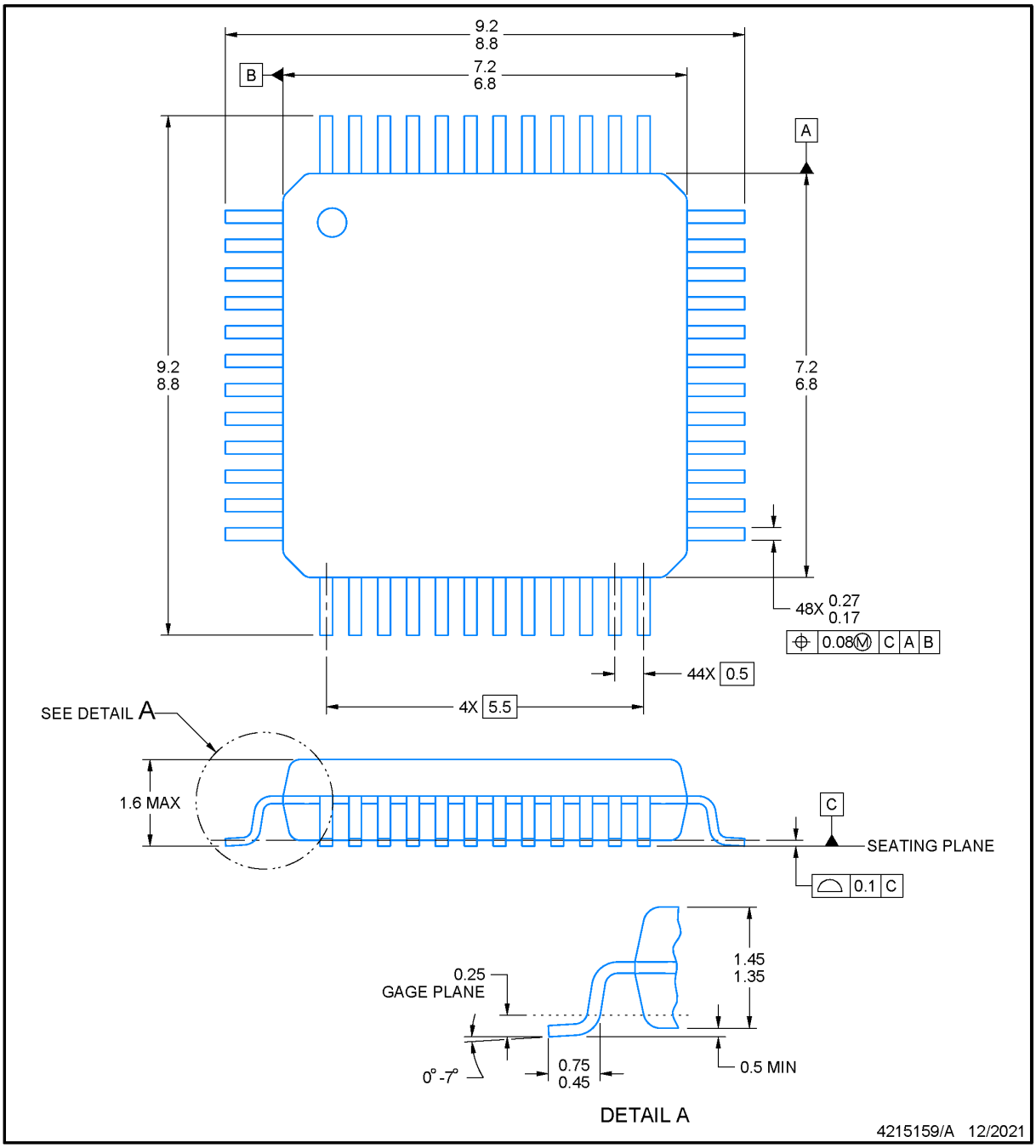

NOTES:

1. All linear dimensions are in millimeters. Any dimensions in parenthesis are for reference only. Dimensioning and tolerancing per ASME Y14.5M.
2. This drawing is subject to change without notice.
3. Reference JEDEC registration MS-026.
4. This may also be a thermally enhanced plastic package with leads conected to the die pads.

Copyright © 2025 Texas Instruments Incorporated

EXAMPLE BOARD LAYOUT

PT0048A

LQFP - 1.6 mm max height

LOW PROFILE QUAD FLATPACK

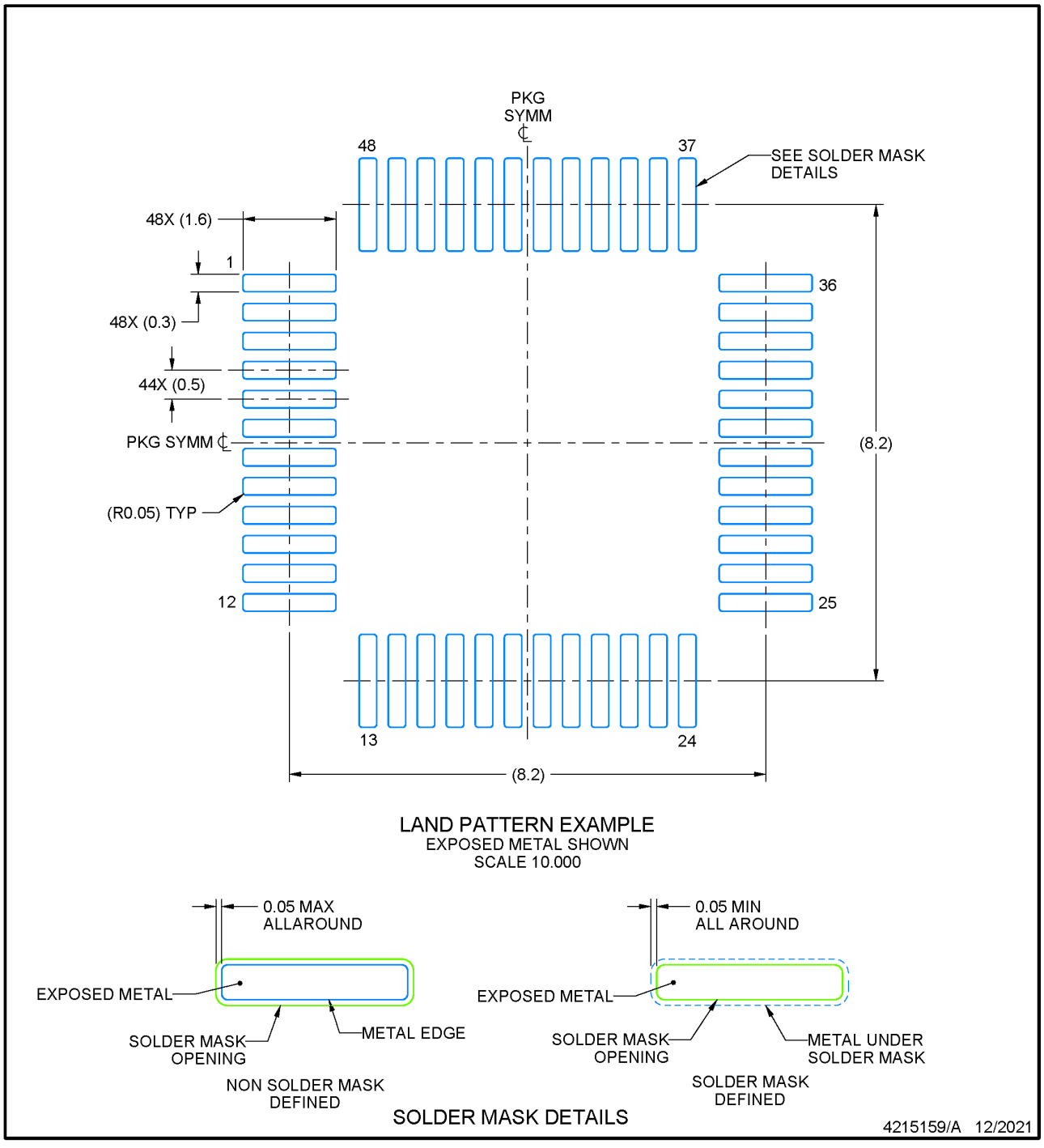

NOTES: (continued)

5. Publication IPC-7351 may have alternate designs.
6. Solder mask tolerances between and around signal pads can vary based on board fabrication site.

Copyright © 2025 Texas Instruments Incorporated

EXAMPLE STENCIL DESIGN

PT0048A

LQFP - 1.6 mm max height

LOW PROFILE QUAD FLATPACK

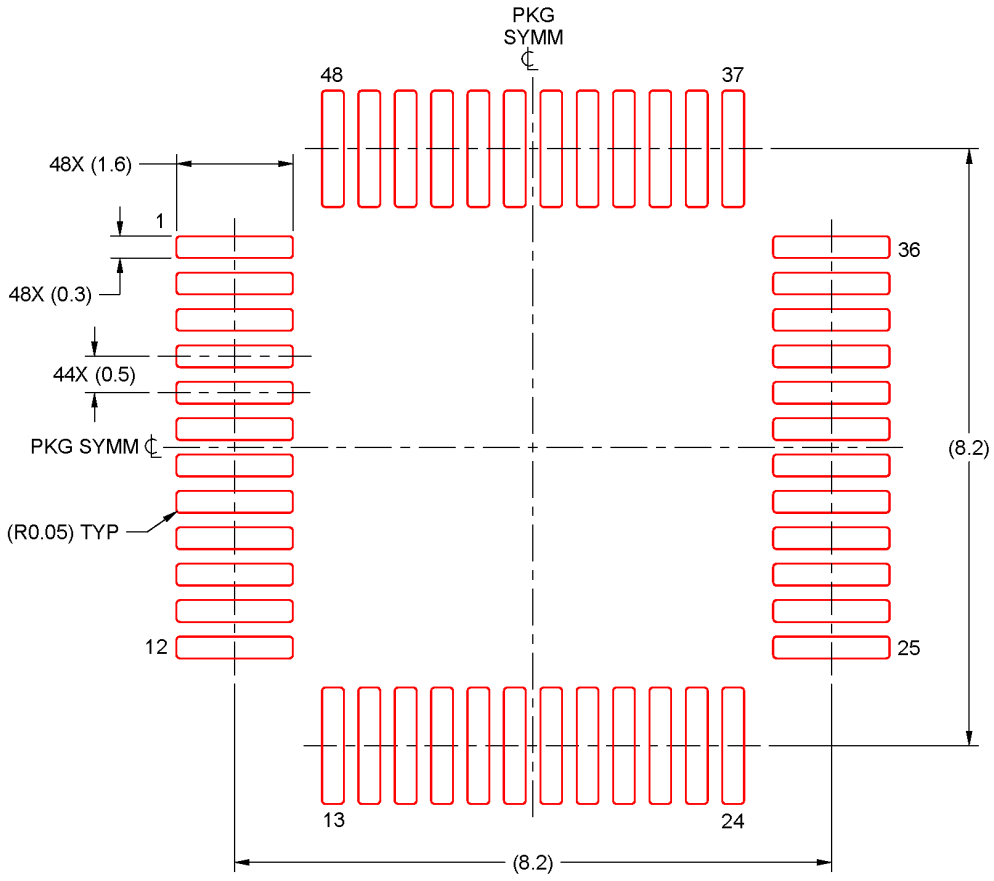

SOLDER PASTE EXAMPLE
BASED ON 0.1 mm THICK STENCIL
SCALE: 10X

4215159/A 12/2021

NOTES: (continued)

7. Laser cutting apertures with trapezoidal walls and rounded corners may offer better paste release. IPC-7525 may have alternate design recommendations.
8. Board assembly site may have different recommendations for stencil design.

Copyright © 2025 Texas Instruments Incorporated

PACKAGE OUTLINE

RGZ0048B



VQFN - 1 mm max height

PLASTIC QUAD FLATPACK - NO LEAD

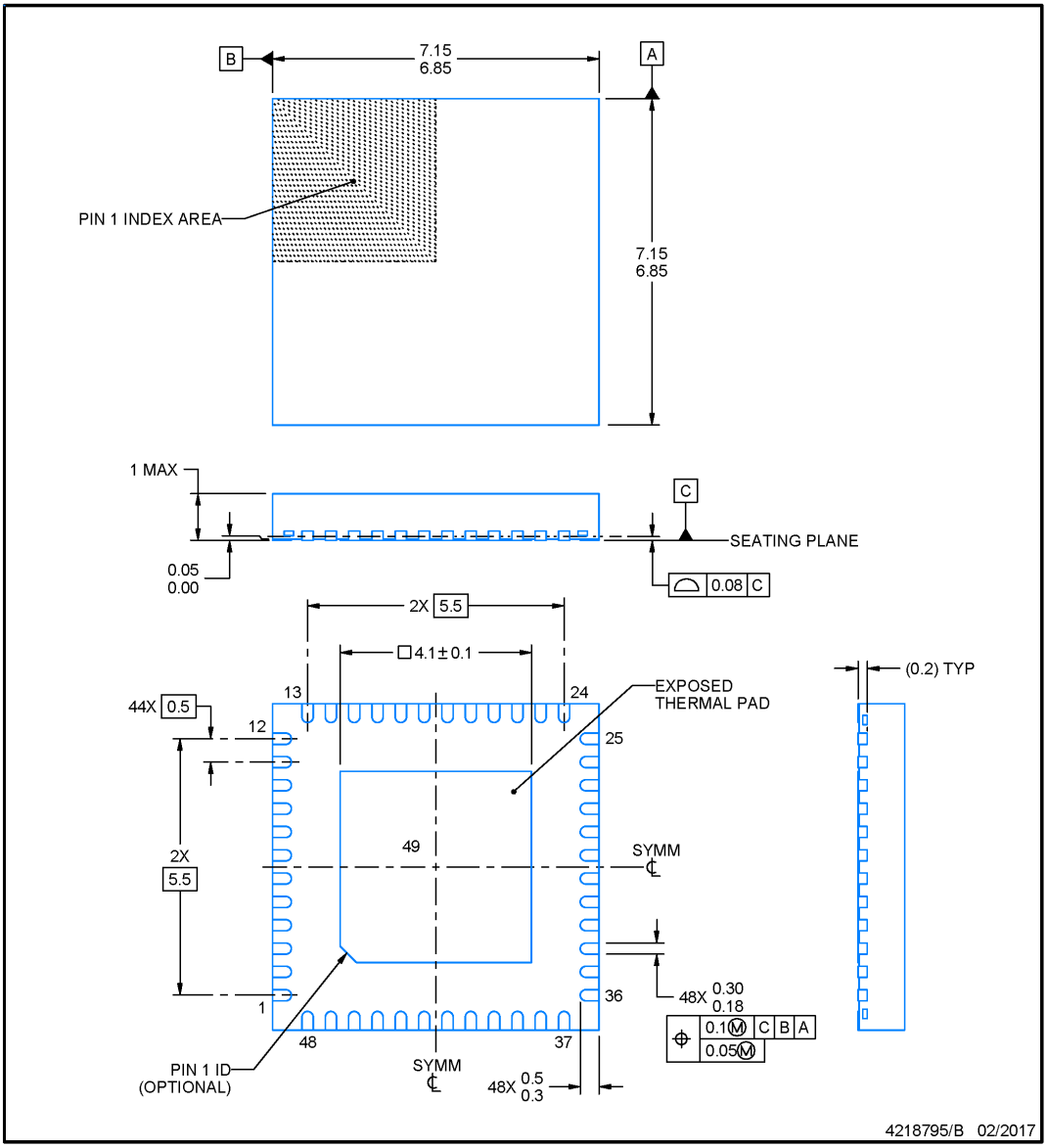

NOTES:

1. All linear dimensions are in millimeters. Any dimensions in parenthesis are for reference only. Dimensioning and tolerancing per ASME Y14.5M.
2. This drawing is subject to change without notice.
3. The package thermal pad must be soldered to the printed circuit board for thermal and mechanical performance.

Copyright © 2025 Texas Instruments Incorporated

EXAMPLE BOARD LAYOUT

RGZ0048B — **VQFN - 1 mm max height**

PLASTIC QUAD FLATPACK - NO LEAD

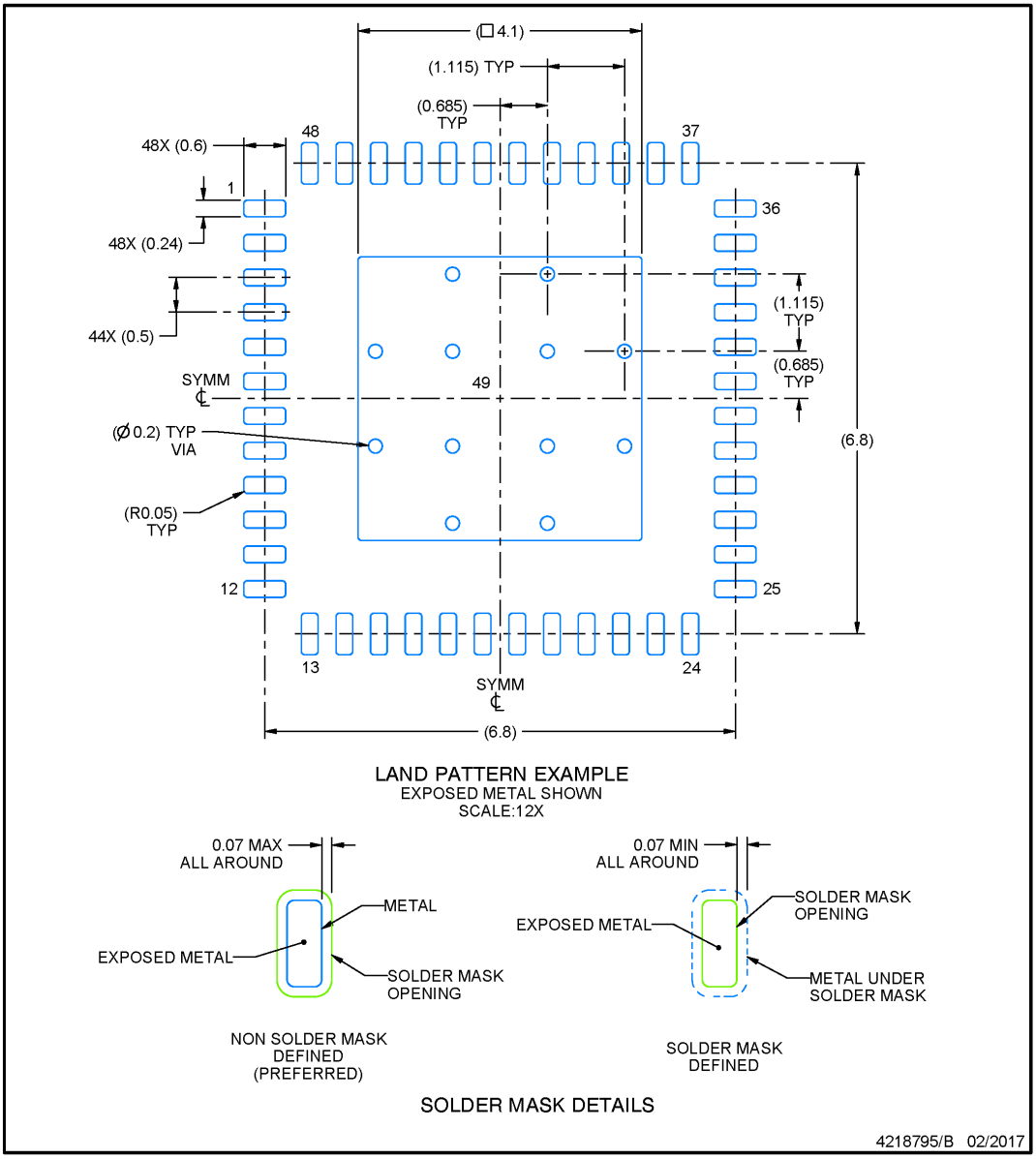

NOTES: (continued)

4. This package is designed to be soldered to a thermal pad on the board. For more information, see Texas Instruments literature number SLUA271 (www.ti.com/lit/slua271).
5. Vias are optional depending on application, refer to device data sheet. If any vias are implemented, refer to their locations shown on this view. It is recommended that vias under paste be filled, plugged or tented.

Copyright © 2025 Texas Instruments Incorporated

EXAMPLE STENCIL DESIGN

RGZ0048B — **VQFN - 1 mm max height**

PLASTIC QUAD FLATPACK - NO LEAD

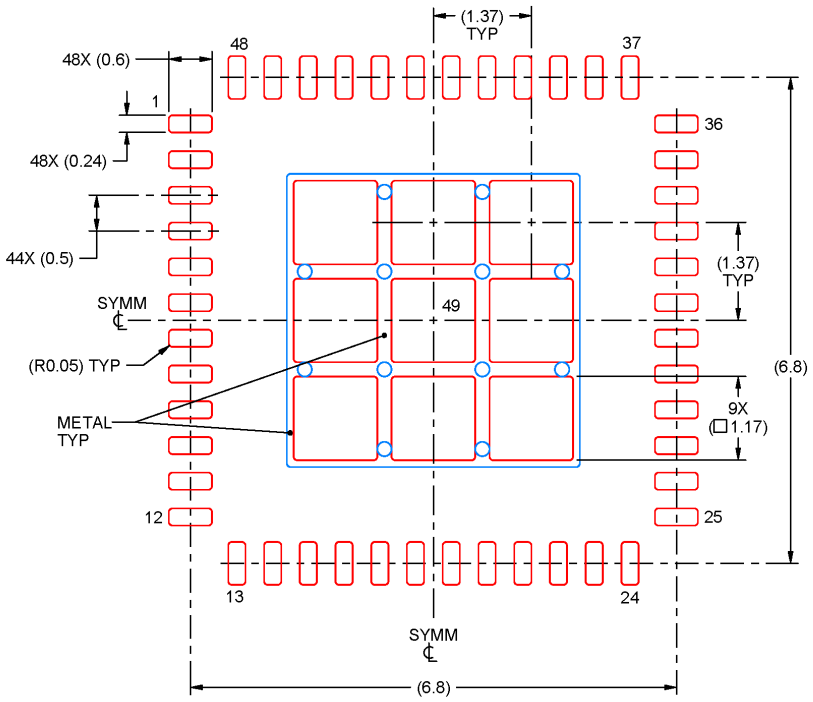

SOLDER PASTE EXAMPLE
BASED ON 0.125 mm THICK STENCIL

EXPOSED PAD 49
73% PRINTED SOLDER COVERAGE BY AREA UNDER PACKAGE
SCALE:12X

4218795/B 02/2017

NOTES: (continued)

6. Laser cutting apertures with trapezoidal walls and rounded corners may offer better paste release. IPC-7525 may have alternate design recommendations.

Copyright © 2025 Texas Instruments Incorporated

PACKAGING INFORMATION

Orderable part number	Status (1)	Material type (2)	Package | Pins	Package qty | Carrier	RoHS (3)	Lead finish/ Ball material (4)	MSL rating/ Peak reflow (5)	Op temp (°C)	Part marking (6)
MSPM0L1116SPTR	Active	Production	LQFP (PT) | 48	1000 | LARGE T&R	Yes	NIPDAU	Level-2-260C-1 YEAR	-40 to 125	M0L1116S
MSPM0L1116SRGER	Active	Production	VQFN (RGE) | 24	5000 | LARGE T&R	Yes	NIPDAU	Level-1-260C-UNLIM	-40 to 125	MSPM0 L1116S
MSPM0L1116SRGZR	Active	Production	VQFN (RGZ) | 48	4000 | LARGE T&R	Yes	NIPDAU	Level-2-260C-1 YEAR	-40 to 125	MSPM0 L1116S
MSPM0L1116SRHBR	Active	Production	VQFN (RHB) | 32	5000 | LARGE T&R	Yes	NIPDAU	Level-2-260C-1 YEAR	-40 to 125	MSPM0 L1116S
MSPM0L1117SPTR	Active	Production	LQFP (PT) | 48	1000 | LARGE T&R	Yes	NIPDAU	Level-2-260C-1 YEAR	-40 to 125	M0L1117S
MSPM0L1117SRGER	Active	Production	VQFN (RGE) | 24	5000 | LARGE T&R	Yes	NIPDAU	Level-1-260C-UNLIM	-40 to 125	MSPM0 L1117S
MSPM0L1117SRGZR	Active	Production	VQFN (RGZ) | 48	4000 | LARGE T&R	Yes	NIPDAU	Level-2-260C-1 YEAR	-40 to 125	MSPM0 L1117S
MSPM0L1117SRHBR	Active	Production	VQFN (RHB) | 32	5000 | LARGE T&R	Yes	NIPDAU	Level-2-260C-1 YEAR	-40 to 125	MSPM0 L1117S
XMSM0L1117SPTR.A	Active	Preproduction	LQFP (PT) | 48	1000 | LARGE T&R	-	Call TI	Call TI	See XMSM0L1117SPTR	
XMSM0L1117SRGER.A	Active	Preproduction	VQFN (RGE) | 24	5000 | LARGE T&R	-	Call TI	Call TI	See XMSM0L1117SRGER	
XMSM0L1117SRGZR.A	Active	Preproduction	VQFN (RGZ) | 48	3000 | LARGE T&R	-	Call TI	Call TI	See XMSM0L1117SRGZR	
XMSM0L1117SRHBR.A	Active	Preproduction	VQFN (RHB) | 32	5000 | LARGE T&R	-	Call TI	Call TI	See XMSM0L1117SRHBR	

(1) **Status:** For more details on status, see our product life cycle.

(2) **Material type:** When designated, preproduction parts are prototypes/experimental devices, and are not yet approved or released for full production. Testing and final process, including without limitation quality assurance, reliability performance testing, and/or process qualification, may not yet be complete, and this item is subject to further changes or possible discontinuation. If available for ordering, purchases will be subject to an additional waiver at checkout, and are intended for early internal evaluation purposes only. These items are sold without warranties of any kind.

(3) **RoHS values:** Yes, No, RoHS Exempt. See the TI RoHS Statement for additional information and value definition.

(4) **Lead finish/Ball material:** Parts may have multiple material finish options. Finish options are separated by a vertical ruled line. Lead finish/Ball material values may wrap to two lines if the finish value exceeds the maximum column width.

(5) **MSL rating/Peak reflow:** The moisture sensitivity level ratings and peak solder (reflow) temperatures. In the event that a part has multiple moisture sensitivity ratings, only the lowest level per JEDEC standards is shown. Refer to the shipping label for the actual reflow temperature that will be used to mount the part to the printed circuit board.

(6) **Part marking:** There may be an additional marking, which relates to the logo, the lot trace code information, or the environmental category of the part.

Multiple part markings will be inside parentheses. Only one part marking contained in parentheses and separated by a "~" will appear on a part. If a line is indented then it is a continuation of the previous line and the two combined represent the entire part marking for that device.

Important Information and Disclaimer: The information provided on this page represents TI's knowledge and belief as of the date that it is provided. TI bases its knowledge and belief on information provided by third parties, and makes no representation or warranty as to the accuracy of such information. Efforts are underway to better integrate information from third parties. TI has taken and continues to take reasonable steps to provide representative and accurate information but may not have conducted destructive testing or chemical analysis on incoming materials and chemicals. TI and TI suppliers consider certain information to be proprietary, and thus CAS numbers and other limited information may not be available for release.

In no event shall TI's liability arising out of such information exceed the total purchase price of the TI part(s) at issue in this document sold by TI to Customer on an annual basis.

OTHER QUALIFIED VERSIONS OF MSPM0L1116, MSPM0L1117 :

- Automotive : MSPM0L1116-Q1, MSPM0L1117-Q1

NOTE: Qualified Version Definitions:

- Automotive - Q100 devices qualified for high-reliability automotive applications targeting zero defects

TAPE AND REEL INFORMATION

REEL DIMENSIONS

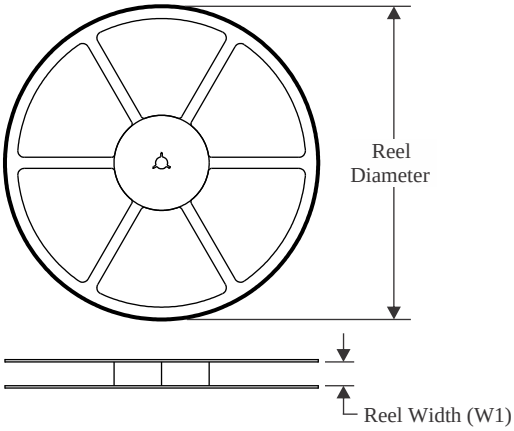

TAPE DIMENSIONS

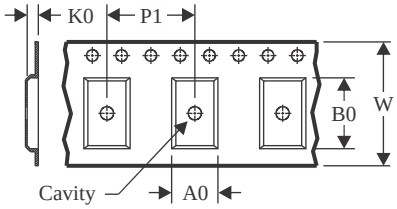

A0	Dimension designed to accommodate the component width
B0	Dimension designed to accommodate the component length
K0	Dimension designed to accommodate the component thickness
W	Overall width of the carrier tape
P1	Pitch between successive cavity centers

QUADRANT ASSIGNMENTS FOR PIN 1 ORIENTATION IN TAPE

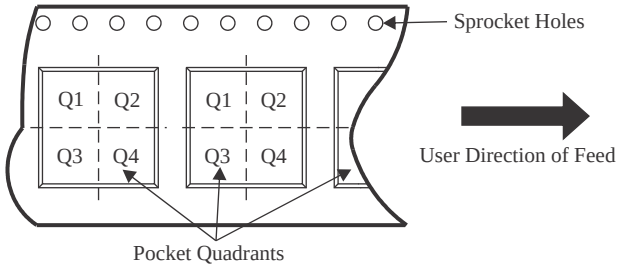

*All dimensions are nominal

Device	Package Type	Package Drawing	Pins	SPQ	Reel Diameter (mm)	Reel Width W1 (mm)	A0 (mm)	B0 (mm)	K0 (mm)	P1 (mm)	W (mm)	Pin1 Quadrant
MSPM0L1116SPTR	LQFP	PT	48	1000	330.0	16.4	9.6	9.6	1.9	12.0	16.0	Q2
MSPM0L1116SRGER	VQFN	RGE	24	5000	330.0	12.4	4.25	4.25	1.15	8.0	12.0	Q2
MSPM0L1116SRGZR	VQFN	RGZ	48	4000	330.0	16.4	7.3	7.3	1.1	12.0	16.0	Q2
MSPM0L1116SRHBR	VQFN	RHB	32	5000	330.0	12.4	5.3	5.3	1.1	8.0	12.0	Q2
MSPM0L1117SPTR	LQFP	PT	48	1000	330.0	16.4	9.6	9.6	1.9	12.0	16.0	Q2
MSPM0L1117SRGER	VQFN	RGE	24	5000	330.0	12.4	4.25	4.25	1.15	8.0	12.0	Q2
MSPM0L1117SRGZR	VQFN	RGZ	48	4000	330.0	16.4	7.3	7.3	1.1	12.0	16.0	Q2
MSPM0L1117SRHBR	VQFN	RHB	32	5000	330.0	12.4	5.3	5.3	1.1	8.0	12.0	Q2

TAPE AND REEL BOX DIMENSIONS

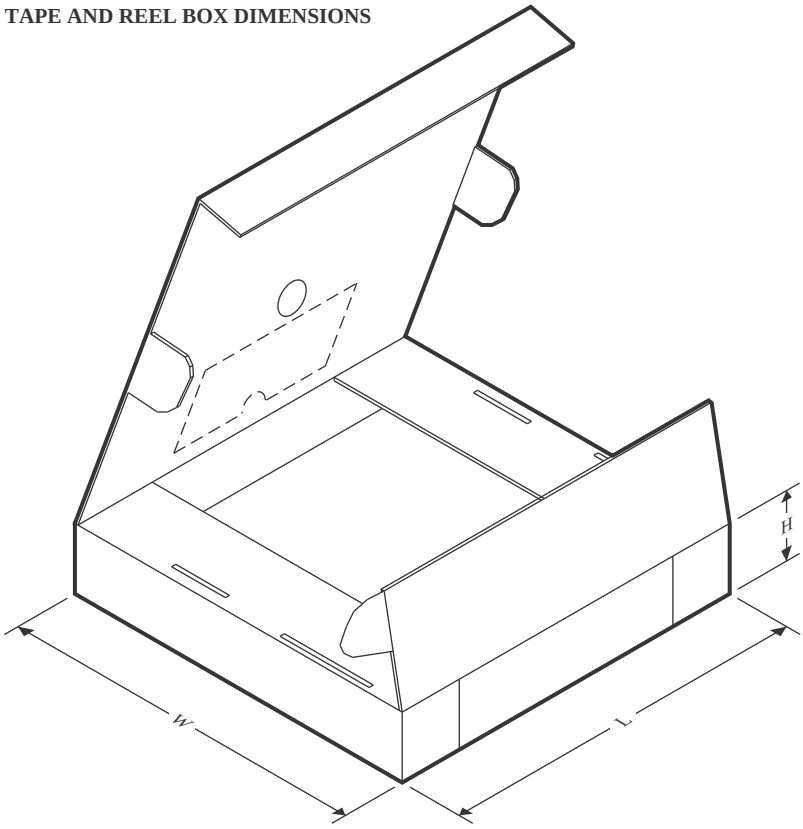

*All dimensions are nominal

Device	Package Type	Package Drawing	Pins	SPQ	Length (mm)	Width (mm)	Height (mm)
MSPM0L1116SPTR	LQFP	PT	48	1000	336.6	336.6	31.8
MSPM0L1116SRGER	VQFN	RGE	24	5000	360.0	360.0	36.0
MSPM0L1116SRGZR	VQFN	RGZ	48	4000	360.0	360.0	36.0
MSPM0L1116SRHBR	VQFN	RHB	32	5000	360.0	360.0	36.0
MSPM0L1117SPTR	LQFP	PT	48	1000	336.6	336.6	31.8
MSPM0L1117SRGER	VQFN	RGE	24	5000	360.0	360.0	36.0
MSPM0L1117SRGZR	VQFN	RGZ	48	4000	360.0	360.0	36.0
MSPM0L1117SRHBR	VQFN	RHB	32	5000	360.0	360.0	36.0

IMPORTANT NOTICE AND DISCLAIMER

TI PROVIDES TECHNICAL AND RELIABILITY DATA (INCLUDING DATASHEETS), DESIGN RESOURCES (INCLUDING REFERENCE DESIGNS), APPLICATION OR OTHER DESIGN ADVICE, WEB TOOLS, SAFETY INFORMATION, AND OTHER RESOURCES “AS IS” AND WITH ALL FAULTS, AND DISCLAIMS ALL WARRANTIES, EXPRESS AND IMPLIED, INCLUDING WITHOUT LIMITATION ANY IMPLIED WARRANTIES OF MERCHANTABILITY, FITNESS FOR A PARTICULAR PURPOSE OR NON-INFRINGEMENT OF THIRD PARTY INTELLECTUAL PROPERTY RIGHTS.

These resources are intended for skilled developers designing with TI products. You are solely responsible for (1) selecting the appropriate TI products for your application, (2) designing, validating and testing your application, and (3) ensuring your application meets applicable standards, and any other safety, security, regulatory or other requirements.

These resources are subject to change without notice. TI grants you permission to use these resources only for development of an application that uses the TI products described in the resource. Other reproduction and display of these resources is prohibited. No license is granted to any other TI intellectual property right or to any third party intellectual property right. TI disclaims responsibility for, and you fully indemnify TI and its representatives against any claims, damages, costs, losses, and liabilities arising out of your use of these resources.

TI’s products are provided subject to TI’s Terms of Sale, TI’s General Quality Guidelines, or other applicable terms available either on ti.com or provided in conjunction with such TI products. TI’s provision of these resources does not expand or otherwise alter TI’s applicable warranties or warranty disclaimers for TI products. Unless TI explicitly designates a product as custom or customer-specified, TI products are standard, catalog, general purpose devices.

TI objects to and rejects any additional or different terms you may propose.

Copyright © 2026, Texas Instruments Incorporated

Last updated 10/2025