ROHS

REV.	ECN NO.	DESCRIPTION	DRAW	DATE

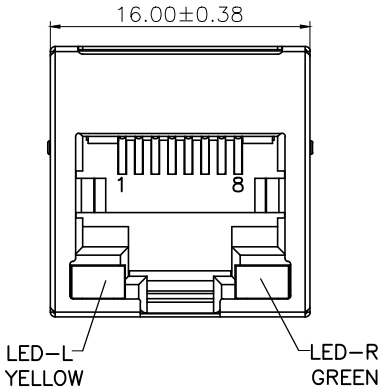

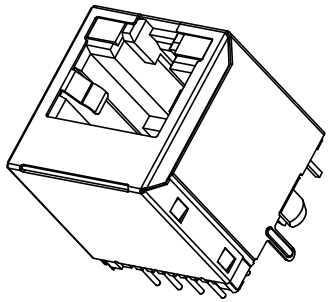

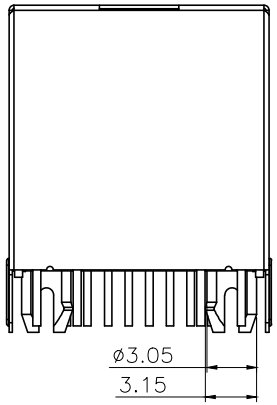

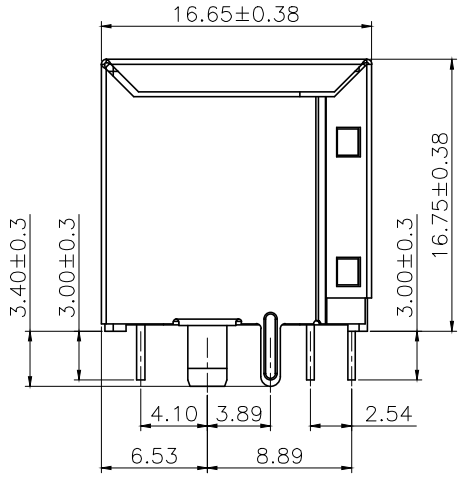

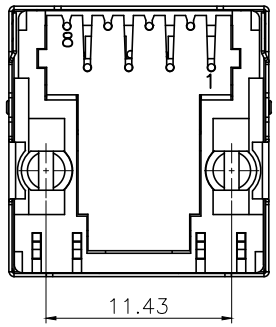

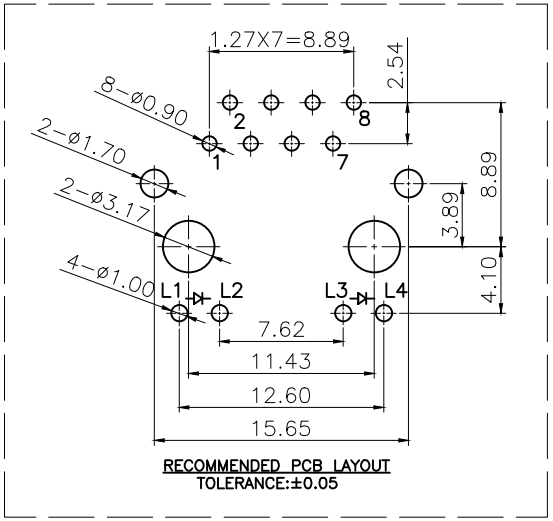

NOTE:
1. MATERIAL:
   1.1 HOUSING: PBT L94V-0 BLACK
   1.2 CONTACT: ø0.46mm COPPER ALLOY
   1.3 SHELL: T=0.2mm,COPPER ALLOY
2. FINISH:
   2.1 CONTACT: G/F PLATED OVER Ni
   2.2 SHELL: PLATING Ni OVERALL
3. ELECTRICAL:
   3.1 CONTACT CURRENT RATING: 1.5A MIN.
   3.2 VOLTAGE RATING :125V AC (rms)
   3.3 WITHSTANDING VOLTAGE: 1000 VAC
   3.4 INSULATION RESISTANCE: 500 MEGAOHMS MIN.
   3.5 CONTACT RESISTANCE: 30 MILLIOHMS MAX.
4. ENVIRONMENTAL :
   4.1 OPERATING TEMPERATURE:-40°C TO +85°C
   4.2 STORAGE TEMPERATURE:-40°C TO +85°C

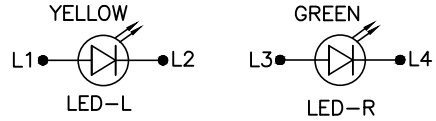

COSTOMER DRAWING				深圳市莱联电子有限公司 SHENZHEN LAILIAN ELECTRONICS CO.,LTD			
DRAWING				TITLE	RJ45 直立式带壳无弹左绿右黄	REV.	A
CHECKED				PART NO.	LAIL-RJ45-LED2-BY-01-ZC	UNITS	mm
APPROVED				DWG. NO.		Projection	
TOLERANCES ARE							
30-150	±0.35	ANGLE					
10-30	±0.2						
5-10	±0.15	±3°					
0-5	±0.1						