ROHS

| REV. | ECN NO. | DESCRIPTION | DRAW | DATE |
|---|---|---|---|---|
| | | | | |

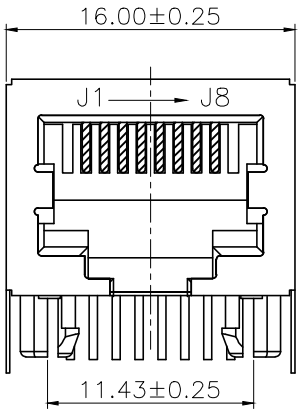


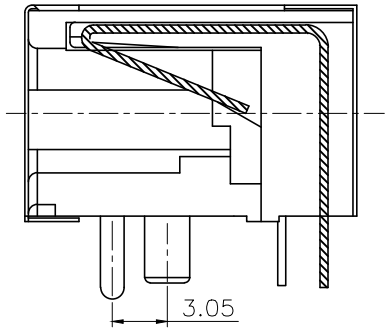


SPECIFICATION:
Electrical:
Current Rating:1.5Amp max @25℃
Voltage Rating:150VAC max
Insulation Resistance:500 megohms min
Contact Resistance:30 milliohms max
Withstanding Voltage:1000 VAC
Mechanical:
Durabillity:750 Cycles
Operating Temperature:−40℃~+70℃
Storage Temperature:−50℃~+75℃
Contact Normal Force:100g Minimum
Material:
Housing:PBT Black UL94V−0
Shield: 0.15mm Thickness SUS304 Ni Plated
Contact:0.45mm Dia Phosphor Bronze
Plated Gold Over Ni
Soldering Temperature: 260+/−5℃,5sec/95%Areabe covered
Withstand Temperature: 270+/−5℃,5sec No stick tin melting phenomenon

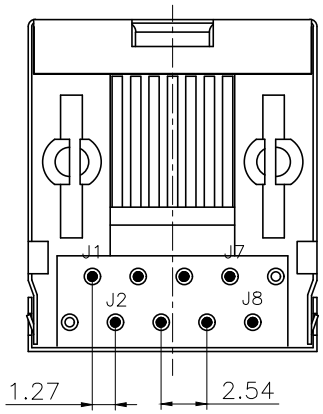


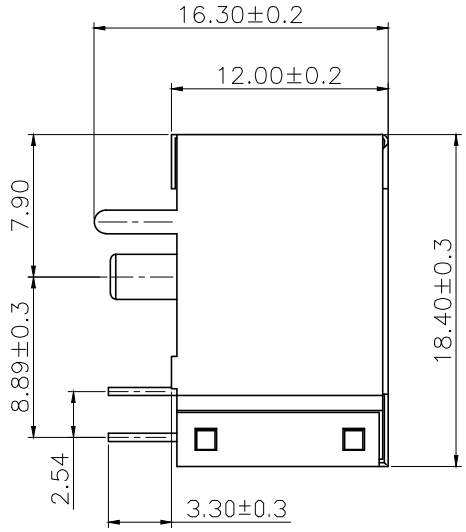


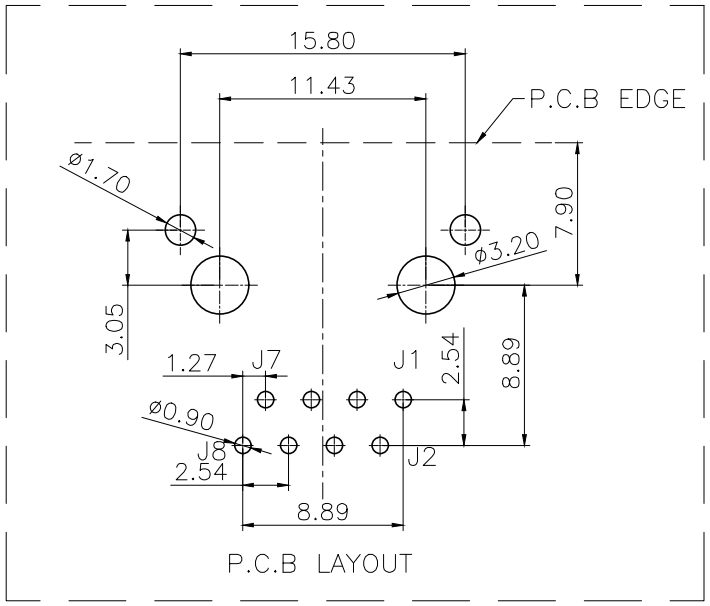


| | | | | | |
|---|---|---|---|---|---|
| COSTOMER DRAWING | | | 深圳市莱联电子有限公司 SHENZHEN LAILIAN ELECTRONICS CO.,LTD | | |
| DRAWING | | | TITLE | RJ45 8P8C带壳无弹无灯 | REV. A |
| CHECKED | | | PART NO. | LAIL-RJ45-LED0-BY-01-WC | UNITS mm |
| APPROVED | | | DWG. NO. | | Projection |
| TOLERANCES ARE | | | | | |
| 30-150 | ±0.35 | ANGLE | | | |
| 10-30 | ±0.2 | | | | |
| 5-10 | ±0.15 | ±3° | | | |
| 0-5 | ±0.1 | | | | |