ROHS

REV.	ECN NO.	DESCRIPTION	DRAW	DATE

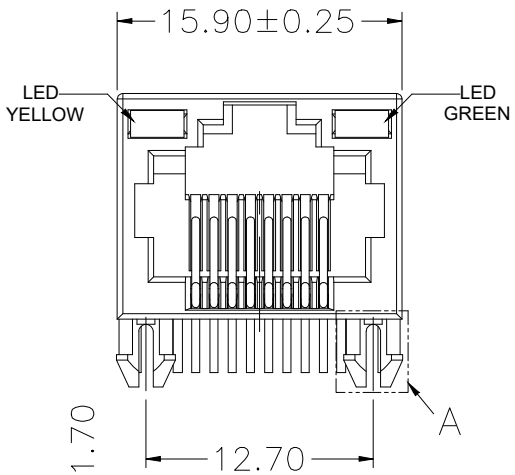

DETAIL A

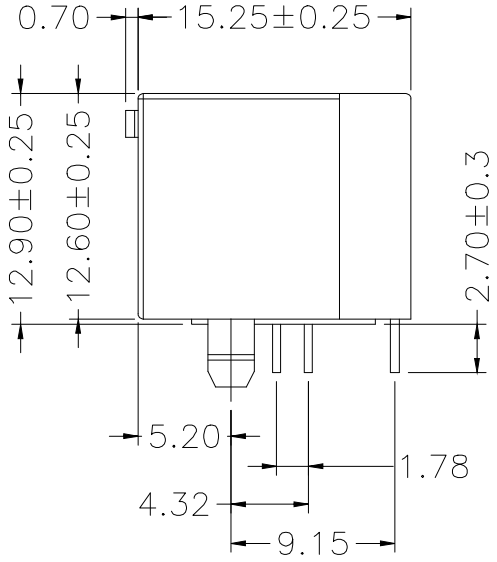

SPECIFICATION:
Electrical:
Current Rating:1.5Amp MAX.
Voltage Rating:150VAC MAX
Insulation Resistance:500 Megohms MIN
Contact Resistance:20 milliohms MAX (Initial)
Withstanding Voltage:
Contact to Contact: 1,000 VDC or AC Peak for 1 minute
Mechanical:
Operating Temperature:−40°C~+85°C
Storage Temperature: −40°C~+85°C
Durability:750 Mating Cycles MIN
Material:
Housing:Thermoplastic UL94V−0
Contact:0.45mm Dia Phosphor Bronze C51000
Plated Gold Over Ni
Wave Soldering: 260+/−5°C,5 sec max;
Resistance to solder: 260+/−5°C,10 +/− 1sec
packaging:Tray

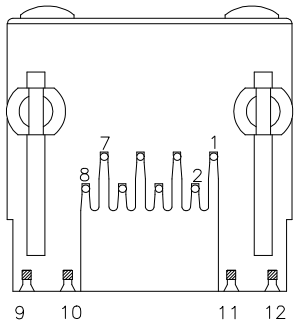

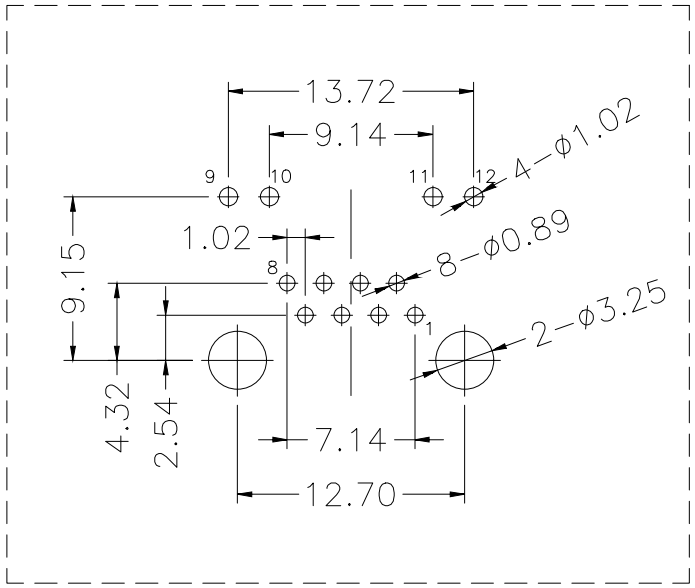

PCB LAYOUT

LEFT LED			RIGHT LED		
颜色	脚位	波长（nm）	颜色	脚位	波长（nm）
Yellow	Yellow 11 ± 12	Yellow:585-595	Green	Green 9 ± 10	Green:563-575

COSTOMER DRAWING			
DRAWING			
CHECKED			
APPROVED			
TOLERANCES ARE			
30-150	±0.35	ANGLE	
10-30	±0.2		
5-10	±0.15	±3°	
0-5	±0.1		

深圳市莱联电子有限公司
SHENZHEN LAILIAN ELECTRONICS CO.,LTD

TITLE	RJ45 1X1 Tab Up 8P8C无铁壳左黄右绿（黑塑）	REV.	A
PART NO.	LAIL-RJ45-LED2-BN-01-WC	UNITS	mm
DWG. NO.		Projection	