ROHS

REV.	ECN NO.	DESCRIPTION	DRAW	DATE

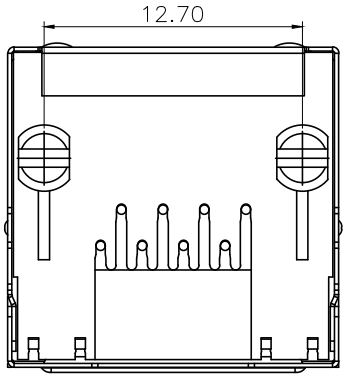

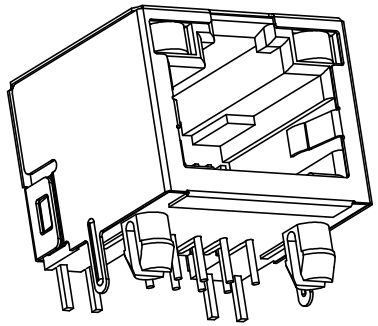

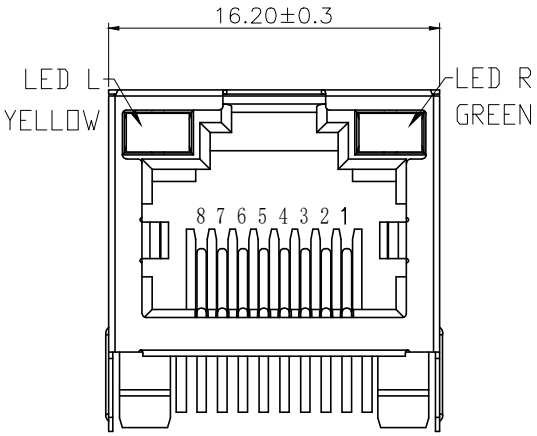

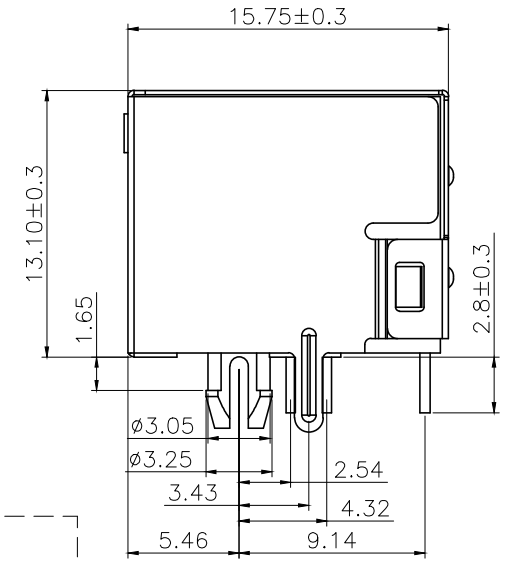

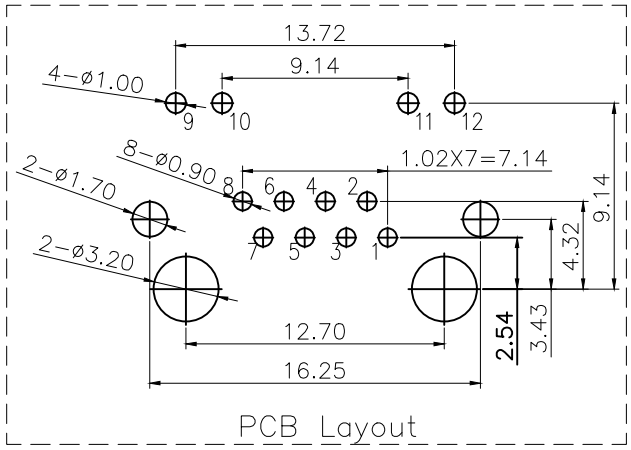

NOTES:
ELECTRICAL:
1. VOLTAGE RATING: 125V AC.
2. CURRENT RATING: 1.5A.
3. CONTACT RESISTANCE: 30 mΩ MAX.
4. INSULATION RESISTANCE: 500 MΩ MIN @ 500V DC.
5. DIELECTRIC STRENGTH: 1000V AC 50Hz or 60Hz,1MIN.

MECHANICAL:
1. INSERT MATERIAL: PBT UL94V-0 BLACK.
2. CONTACT MATERIAL: DIAMETER 0.46mm
C51000(QSn4-0.3)PHOSPHOR
BRONZE GOLD PLATING OVER NICKEL.
3. SHIELD: 0.20mm THICKNESS H65Y BRASS NICKEL PLATED.
4. MATING/UNMATING FORCE: 2.2KG.F MAX.
5. RETENTION STRENGTH: 5.0KG.F MIN BETWEEN JACK AND PLUG.
6. OPERATING LIFE: 750 CYCLES MIN.

ENVIRONMENTAL:
1. STORAGE: −40℃ ~ +85℃ RELATIVE HUMIDITY<70%.
2. OPERATION: −40℃ ~ +85℃.



COSTOMER DRAWING				深圳市莱联电子有限公司 SHENZHEN LAILIAN ELECTRONICS CO.,LTD			
DRAWING				TITLE	RJ45 1000M带壳无弹左绿右黄	REV.	A
CHECKED				PART NO.	LAIL-RJ45-LED2-BY-02-WC	UNITS	mm
APPROVED				DWG. NO.		Projection	
TOLERANCES ARE							
30-150	±0.35	ANGLE					
10-30	±0.2						
5-10	±0.15	±3°					
0-5	±0.1						